Sales Code: CMA003 **Barcode:** 5055275813935 **Brand:** Hudson Reed **Description:** Hudson Reed Luna 1 Tap Hole 520mm Ceramic Basin & Pedestal



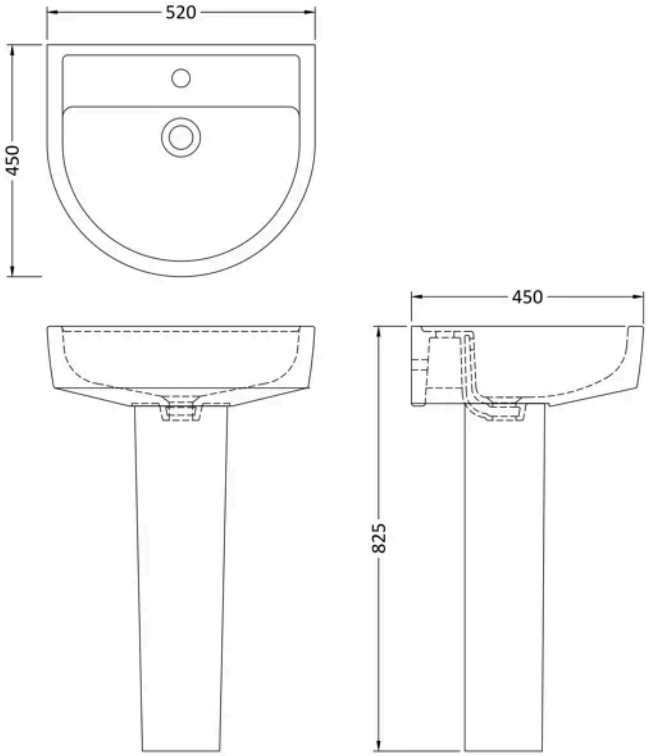

Product Dimensions

Product	825 x 520 x 450mm (H x W x D)
Packaged	550 x 550 x 550mm (H x W x D)
Nett Weight	27.2 kg
Packaged Weight	27.2 kg

Packaging Details

Box Qty	3

Product Details

Country of Origin	United Kingdom
Product Material	Vitreous China
Colour/Finish	White
Style	Contemporary
Ce Certified	Yes
Inner Bowl Height	130 mm
No. Of Tapholes	1
Number Of Bowls	1
Overflow Included	Yes
Tap Included	No
Waste Included	No

© ROXOR Group

Sales Code: ACC020 **Barcode:** 5055369081806 **Brand:** nuie **Description:** Chrome Basin Fixing Bolts (Pair)



Technical Drawing Not Available

Product Dimensions

Packaged	20 x 120 x 150mm (H x W x D)
Nett Weight	0.6 kg
Packaged Weight	0.6 kg

Packaging Details

Box Qty	1

Product Details

Country of Origin	China
Product Material	Stainless Steel
Colour/Finish	Chrome
Style	Contemporary

© ROXOR Group

Sales Code: NCH403 **Barcode:** 5055369029259 **Brand:** nuie **Description:** nuie Provost White Contemporary Full Pedestal

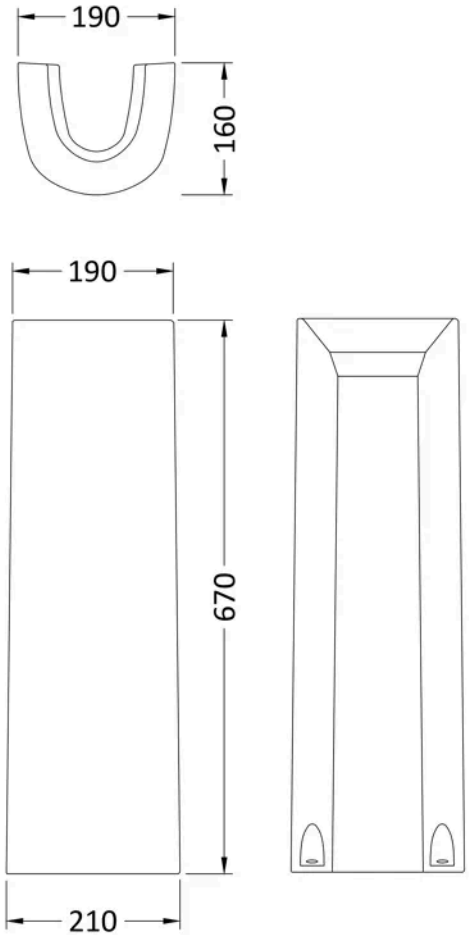

Product Dimensions

Product	670 x 210 x 160mm (H x W x D)
Packaged	680 x 220 x 175mm (H x W x D)
Nett Weight	10.7 kg
Packaged Weight	10.9 kg

Packaging Details

Box Qty	1

Product Details

Country of Origin	China
Product Material	Vitreous China
Colour/Finish	White
Style	Contemporary
Ce Certified	Yes

© ROXOR Group

Sales Code: NCH404 **Barcode:** 5055369029242 **Brand:** nuie **Description:** 1 Tap Hole 520mm Ceramic Basin



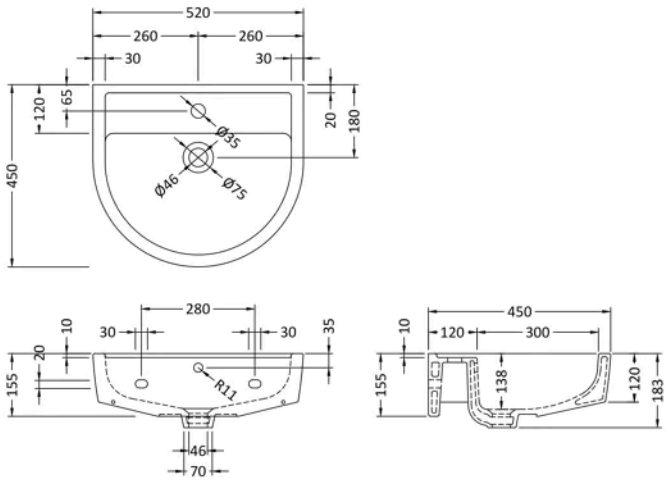

Product Dimensions

Product	183 x 520 x 450mm (H x W x D)
Packaged	200 x 545 x 460mm (H x W x D)
Nett Weight	15.5 kg
Packaged Weight	15.7 kg

Packaging Details

Box Qty	1

Product Details

Country of Origin	China
Product Material	Vitreous China
Colour/Finish	White
Style	Contemporary
Fixings Included	No
Ce Certified	Yes
Inner Bowl Height	130 mm
No. Of Tapholes	1
Number Of Bowls	1

© ROXOR Group