Sales Code: CMA002 **Barcode:** 5055275813928 **Brand:** Hudson Reed **Description:** Hudson Reed Luna 1 Tap Hole 420mm Ceramic Basin & Pedestal



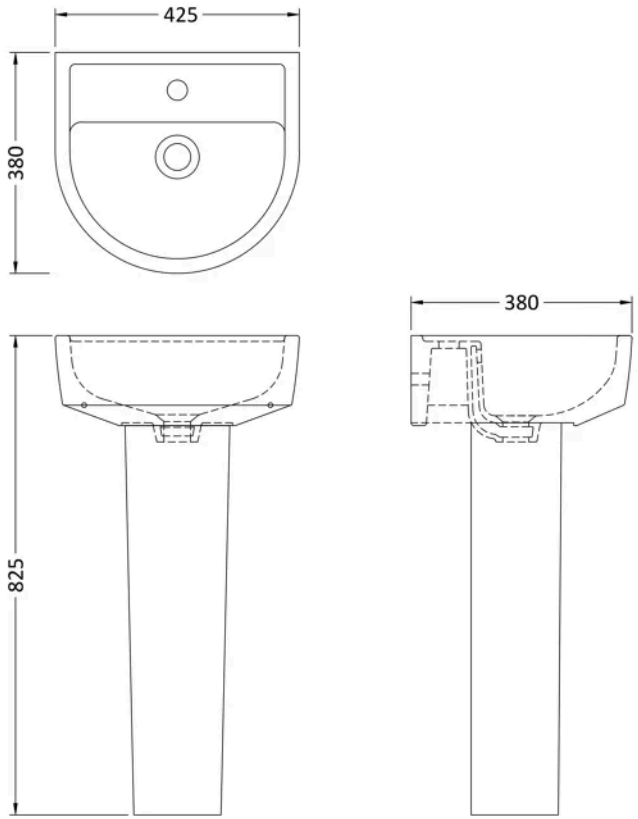

Product Dimensions

Product	825 x 425 x 380mm (H x W x D)
Packaged	550 x 550 x 550mm (H x W x D)
Nett Weight	22 kg
Packaged Weight	22 kg

Packaging Details

Box Qty	3

Product Details

Country of Origin	United Kingdom
Product Material	Vitreous China
Colour/Finish	White
Style	Contemporary
Fixings Included	Yes
Ce Certified	Yes
Inner Bowl Depth	230 mm
Inner Bowl Height	130 mm
Inner Bowl Width	360 mm
No. Of Tapholes	1
Number Of Bowls	1
Overflow Cover Included	No
Overflow Included	Yes
Tap Included	No
Waste Included	No

© ROXOR Group

Sales Code: ACC020 **Barcode:** 5055369081806 **Brand:** nuie **Description:** Chrome Basin Fixing Bolts (Pair)



Technical Drawing Not Available

Product Dimensions

Packaged	20 x 120 x 150mm (H x W x D)
Nett Weight	0.6 kg
Packaged Weight	0.6 kg

Packaging Details

Box Qty	1

Product Details

Country of Origin	China
Product Material	Stainless Steel
Colour/Finish	Chrome
Style	Contemporary

© ROXOR Group

Sales Code: NCH402 **Barcode:** 5055369043293 **Brand:** nuie **Description:** 1 Tap Hole 420mm Ceramic Basin



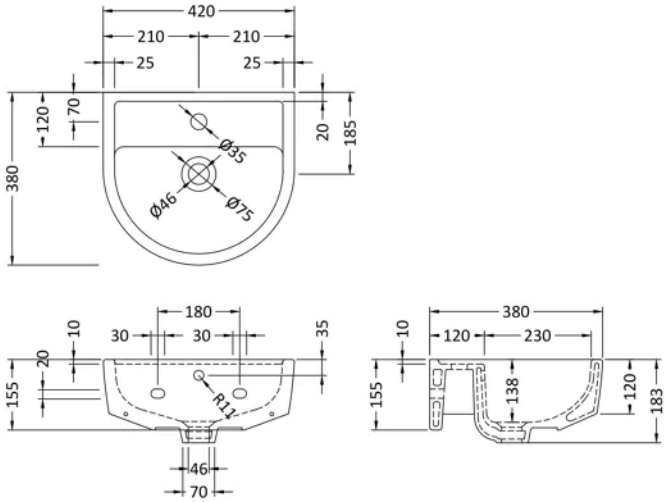

Product Dimensions

Product	183 x 420 x 380mm (H x W x D)
Packaged	200 x 440 x 400mm (H x W x D)
Nett Weight	10.3 kg
Packaged Weight	10.5 kg

Packaging Details

Box Qty	1

Product Details

Country of Origin	China
Product Material	Vitreous China
Colour/Finish	White
Style	Contemporary
Fixings Included	No
Ce Certified	Yes
Inner Bowl Height	130 mm
No. Of Tapholes	1
Number Of Bowls	1
Waste Included	No

© ROXOR Group

Sales Code: NCH403 **Barcode:** 5055369029259 **Brand:** nuie **Description:** nuie Provost White Contemporary Full Pedestal

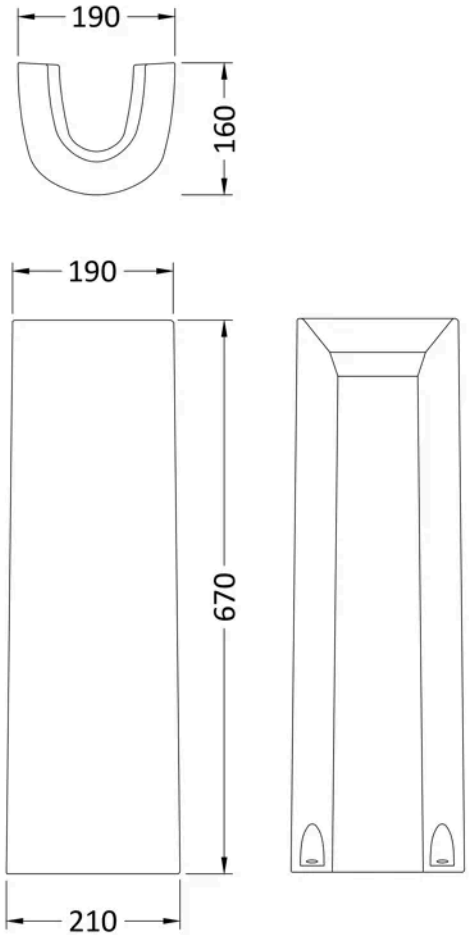

Product Dimensions

Product	670 x 210 x 160mm (H x W x D)
Packaged	680 x 220 x 175mm (H x W x D)
Nett Weight	10.7 kg
Packaged Weight	10.9 kg

Packaging Details

Box Qty	1

Product Details

Country of Origin	China
Product Material	Vitreous China
Colour/Finish	White
Style	Contemporary
Ce Certified	Yes

© ROXOR Group