**Sales Code:** CLS894P

**Barcode:** 5064007013963

**Brand:** Old London

**Description:** Old London Ashwick Satin Green 600mm Wall Hung 1-Drawer Unit With Stone Basin 1 Tap Hole



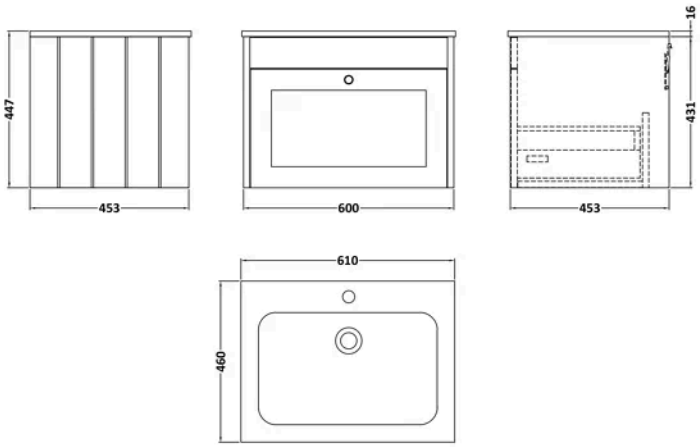


## Product Dimensions

| | |
|---|---|
| Product | 447 x 610 x 460mm (H x W x D) |
| Packaged | 465 x 625 x 480mm (H x W x D) |
| Nett Weight | 32 kg |
| Packaged Weight | 32.5 kg |

## Product Details

| | |
|---|---|
| Country of Origin | China |
| Product Material | Mfc Painted Matt,Stone |
| Colour/Finish | Satin Green |
| Mount Type | Wall Hung |
| Style | Traditional |
| Handle Type | Knob |
| Construction Method | Cam & Wood Dowel |
| Construction Type | Rigid |
| Drawer Type | 80mm High Metal S/C Inc Gallery |
| Fascia Finish | Mfc Painted Matt |
| Handles Included | Yes |
| Inner Bowl Height | 128 mm |
| Leg Set Included | No |
| Material Thickness | 16 mm |
| No. Drawers | 1 |
| No. Of Tapholes | 1 |
| Number Of Bowls | 1 |
| Overflow Cover Included | Yes |
| Overflow Included | Yes |
| Tap Included | No |
| Waste Included | No |

© ROXOR Group

**Sales Code:** CLS894 **Barcode:** 5056817730284 **Brand:** Old London **Description:** Old London Ashwick 600mm Satin Green 1 Drawer Wall Hung Vanity



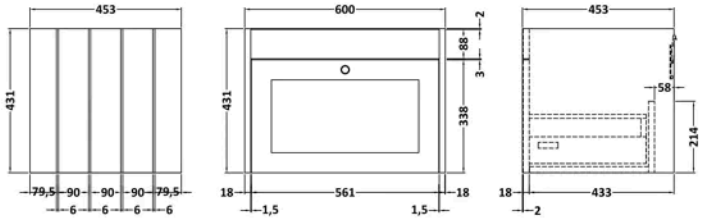


## Product Dimensions

| | |
|---|---|
| Product | 431 x 600 x 453mm (H x W x D) |
| Packaged | 465 x 625 x 480mm (H x W x D) |
| Nett Weight | 19 kg |
| Packaged Weight | 19.5 kg |

## Packaging Details

| | |
|---|---|
| Box Qty | 1 |

## Product Details

| | |
|---|---|
| Country of Origin | China |
| Product Material | Mfc Painted Matt |
| Colour/Finish | Satin Green |
| Mount Type | Wall Hung |
| Style | Traditional |
| Handle Type | Knob |
| Construction Method | Cam & Wood Dowel |
| Construction Type | Rigid |
| Drawer Type | 80mm High Metal S/C Inc Gallery |
| Fascia Finish | Mdf Painted Matt |
| Handles Included | Yes |
| Material Thickness | 16 mm |
| No. Drawers | 1 |
| Waste Shroud | Yes |

© ROXOR Group

**Sales Code:** SBM103 **Barcode:** 5056678424360 **Brand:** nuie **Description:** 600mm 1 Tap Hole White Stone Furniture Basin



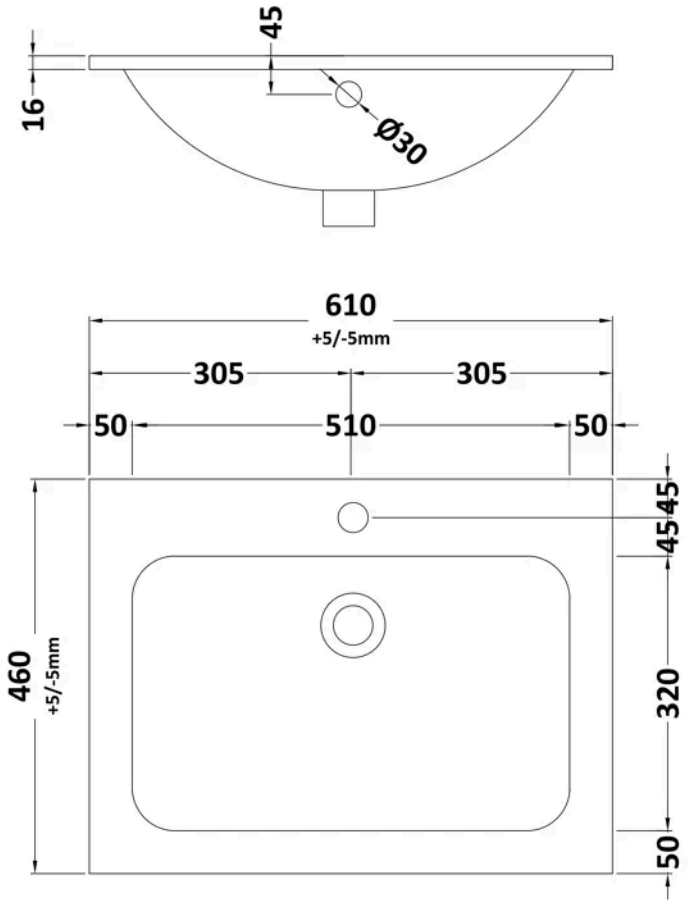


## Product Dimensions

| | |
|---|---|
| Product | 610 x 460mm (W x D) |
| Packaged | 200 x 675 x 530mm (H x W x D) |
| Nett Weight | 13.5 kg |
| Packaged Weight | 14 kg |

## Packaging Details

| | |
|---|---|
| Box Qty | 1 |

## Product Details

| | |
|---|---|
| Country of Origin | China |
| Product Material | Stone |
| Colour/Finish | Matt White |
| Style | Contemporary |
| Bottle Trap Included | No |
| Ce Certified | Yes |
| Inner Bowl Depth | 320 mm |
| Inner Bowl Height | 128 mm |
| Inner Bowl Width | 510 mm |
| No. Of Tapholes | 1 |
| Number Of Bowls | 1 |
| Overflow Cover Included | Yes |
| Overflow Included | Yes |
| Tap Included | No |
| Waste Included | No |

© ROXOR Group