Sales Code: CLS894H

Barcode: 5064007013925

Brand: Old London

Description: Old London Ashwick Satin Green 600mm Wall Hung 1-Drawer Unit With Basin No Tap Hole



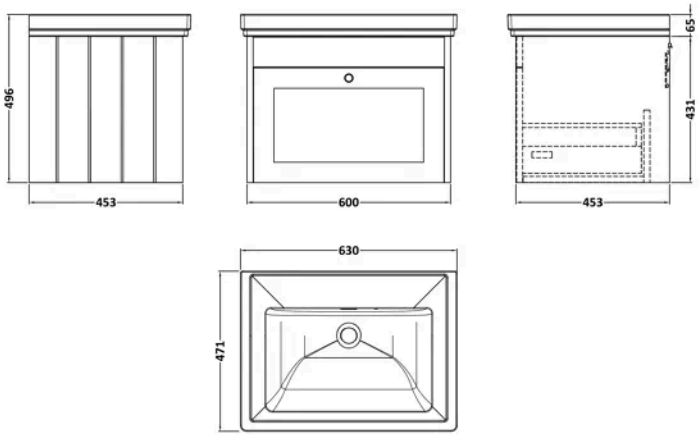

Product Dimensions

Product	452 x 630 x 471mm (H x W x D)
Packaged	485 x 620 x 500mm (H x W x D)
Nett Weight	35.5 kg
Packaged Weight	36 kg

Product Details

Country of Origin	China
Product Material	Mfc Painted Matt
Colour/Finish	Satin Green
Mount Type	Wall Hung
Style	Traditional
Handle Type	Knob
Construction Method	Cam & Wood Dowel
Construction Type	Rigid
Drawer Type	80mm High Metal S/C Inc Gallery
Fascia Finish	Mfc Painted Matt
Handles Included	Yes
Inner Bowl Depth	300 mm
Inner Bowl Height	135 mm
Inner Bowl Width	480 mm
Leg Set Included	No
Material Thickness	16 mm
No. Drawers	1
No. Of Tapholes	No Tapholes
Number Of Bowls	1
Overflow Cover Included	Yes
Overflow Included	Yes
Tap Included	No
Waste Included	No

© ROXOR Group

Sales Code: CBM513 **Barcode:** 5056678431191 **Brand:** nuie **Description:** 0 Tap Hole 600mm Traditional Fireclay Basin



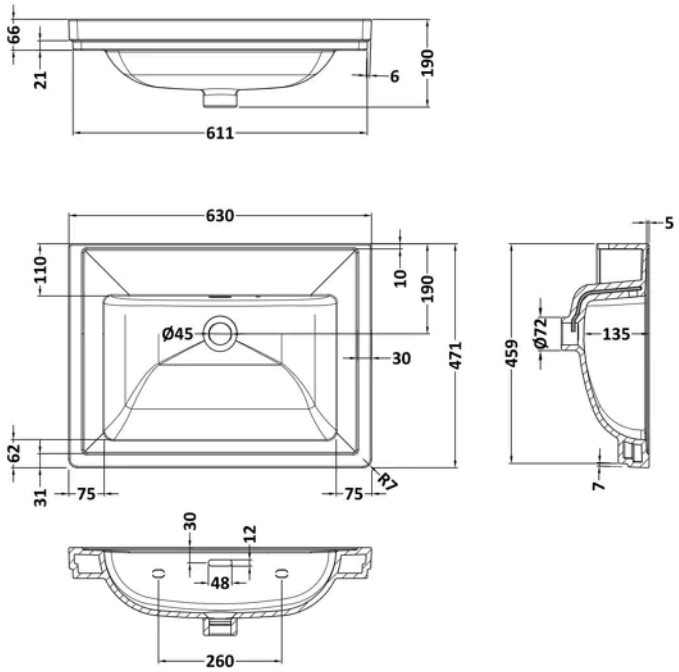

Product Dimensions

Product	190 x 630 x 471mm (H x W x D)
Packaged	490 x 650 x 220mm (H x W x D)
Nett Weight	17 kg
Packaged Weight	17 kg

Packaging Details

Label Size (mm)	50 x 100
Label Colour	White
Label Qty	2.0000

Product Details

Country of Origin	United Arab Emirates
Product Material	Fireclay
Colour/Finish	White
Style	Contemporary
Bottle Trap Included	No
Ce Certified	Yes
Inner Bowl Depth	300 mm
Inner Bowl Height	135 mm
Inner Bowl Width	480 mm
No. Of Tapholes	No Tapholes
Number Of Bowls	1
Overflow Cover Included	No
Overflow Included	Yes
Tap Included	No
Waste Included	No

© ROXOR Group

Sales Code: CLS894 **Barcode:** 5056817730284 **Brand:** nuie **Description:** Old London Ashwick 600mm Satin Green 1 Drawer Wall Hung Vanity



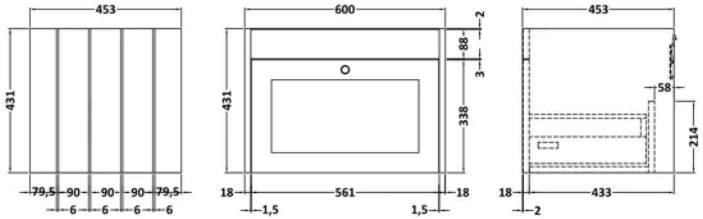

Product Dimensions

Product	431 x 600 x 453mm (H x W x D)
Packaged	465 x 625 x 480mm (H x W x D)
Nett Weight	19 kg
Packaged Weight	19.5 kg

Product Details

Country of Origin	China
Product Material	Mfc Painted Matt
Colour/Finish	Satin Green
Mount Type	Wall Hung
Style	Traditional
Handle Type	Knob
Construction Method	Cam & Wood Dowel
Construction Type	Rigid
Drawer Type	80mm High Metal S/C Inc Gallery
Fascia Finish	Mdf Painted Matt
Handles Included	Yes
Material Thickness	16 mm
No. Drawers	1
Waste Shroud	Yes

© ROXOR Group