Sales Code: CLS894GR1

Barcode: 5064007013888

Brand: Old London

Description: Old London Ashwick Satin Green 600mm Wall Hung 1-Drawer Unit With Marble Top 1 Tap Hole



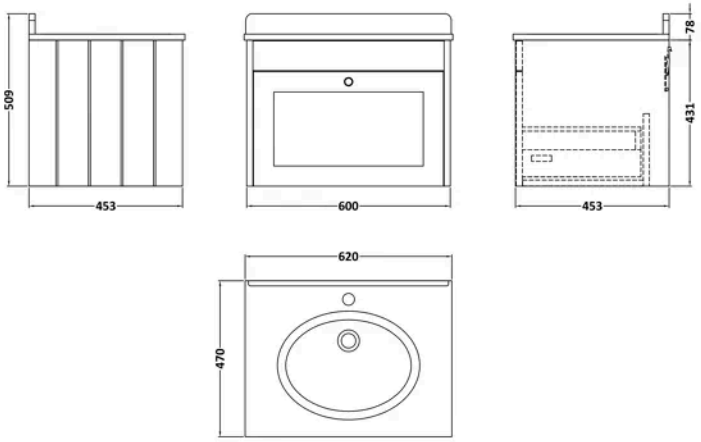

Product Dimensions

Product	445 x 620 x 463mm (H x W x D)
Packaged	550 x 550 x 550mm (H x W x D)
Nett Weight	32 kg
Packaged Weight	32.5 kg

Packaging Details

Box Qty	2

Product Details

Country of Origin	China
Product Material	Mfc Painted Matt
Colour/Finish	Satin Green
Mount Type	Wall Hung
Style	Traditional
Handle Type	Knob
Construction Method	Cam & Wood Dowel
Construction Type	Rigid
Drawer Type	80mm High Metal S/C Inc Gallery
Fascia Finish	Mfc Painted Matt
Handles Included	Yes
Inner Bowl Depth	272 mm
Inner Bowl Height	160 mm
Inner Bowl Width	358 mm
Leg Set Included	No
Material Thickness	16 mm
No. Drawers	1
No. Of Tapholes	1
Number Of Bowls	1
Overflow Cover Included	Yes
Overflow Included	Yes
Tap Included	No
Waste Included	No

© ROXOR Group

Sales Code: CLS894 **Barcode:** 5056817730284 **Brand:** nuie **Description:** Old London Ashwick 600mm Satin Green 1 Drawer Wall Hung Vanity



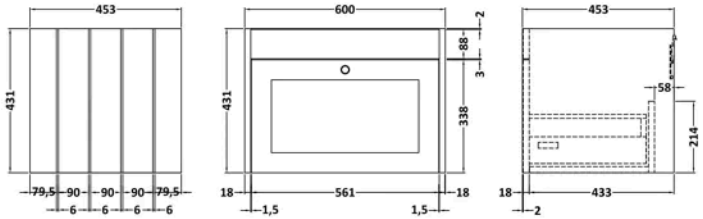

Product Dimensions

Product	431 x 600 x 453mm (H x W x D)
Packaged	465 x 625 x 480mm (H x W x D)
Nett Weight	19 kg
Packaged Weight	19.5 kg

Packaging Details

Box Qty	1

Product Details

Country of Origin	China
Product Material	Mfc Painted Matt
Colour/Finish	Satin Green
Mount Type	Wall Hung
Style	Traditional
Handle Type	Knob
Construction Method	Cam & Wood Dowel
Construction Type	Rigid
Drawer Type	80mm High Metal S/C Inc Gallery
Fascia Finish	Mdf Painted Matt
Handles Included	Yes
Material Thickness	16 mm
No. Drawers	1
Waste Shroud	Yes

© ROXOR Group

Sales Code: LOM223 **Barcode:** 5056211818984 **Brand:** Old London **Description:** Old London 1 Tap Hole 600mm Grey Single Bowl Marble Top Basin



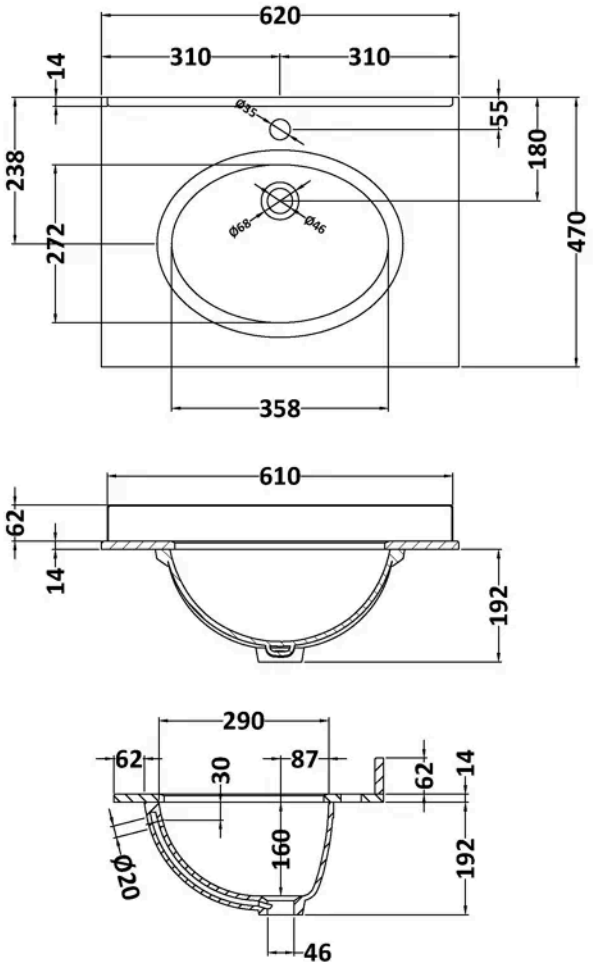

Product Dimensions

Product	268 x 620 x 463mm (H x W x D)
Packaged	310 x 700 x 550mm (H x W x D)
Nett Weight	13.5 kg
Packaged Weight	14 kg

Packaging Details

Box Qty	1

Product Details

Country of Origin	China
Product Material	Vitreous China
Colour/Finish	Grey
Inner Bowl Height	160 mm
No. Of Tapholes	1
Number Of Bowls	1

© ROXOR Group