Sales Code: CLS826C

Barcode: 5064007013499

Brand: Old London

Description: Old London Ashwick Satin Green 800mm Floorstanding 2-Door Unit With Basin 1 Tap Hole



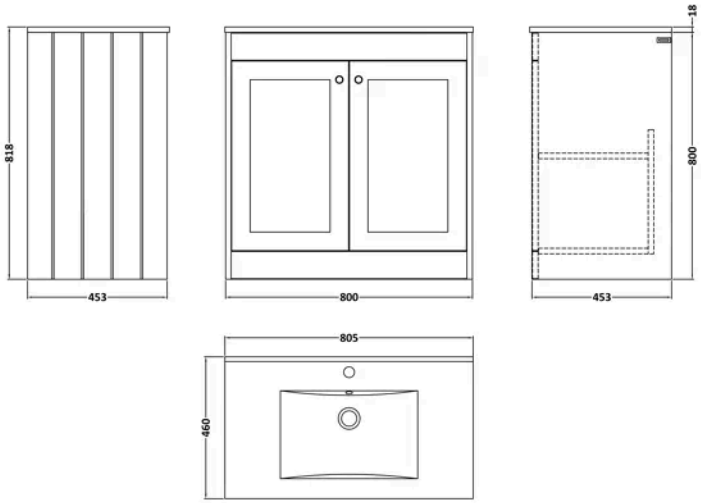

Product Dimensions

Product	818 x 805 x 460mm (H x W x D)
Packaged	800 x 800 x 453mm (H x W x D)
Nett Weight	47 kg
Packaged Weight	47.5 kg

Product Details

Country of Origin	China
Product Material	Mfc Painted Matt
Colour/Finish	Satin Green
Mount Type	Floor
Style	Traditional
Handle Type	Knob
Construction Method	Cam & Wood Dowel
Construction Type	Rigid
Fascia Finish	Mfc Painted Matt
Handles Included	Yes
Inner Bowl Depth	285 mm
Inner Bowl Height	120 mm
Inner Bowl Width	410 mm
Leg Set Included	No
Material Thickness	16 mm
No. Doors	2
No. Of Tapholes	1
No. Shelves	1
Number Of Bowls	1
Number Of Shelves	1
Overflow Cover Included	Yes
Overflow Included	Yes
Tap Included	No
Waste Included	No

© ROXOR Group

Sales Code: BAST9080E **Barcode:** 5056678482742 **Brand:** Hudson Reed **Description:** 1 Tap Hole 800mm Ceramic Minimalist Rectangular Basin



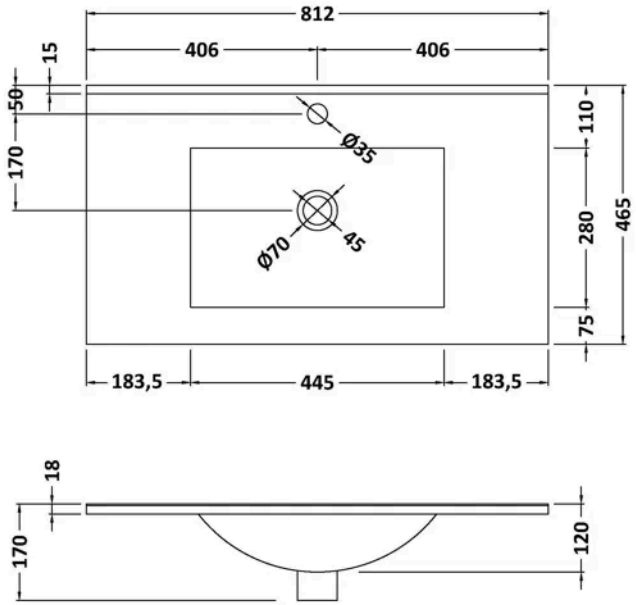

Product Dimensions

Product	170 x 812 x 465mm (H x W x D)
Packaged	195 x 825 x 480mm (H x W x D)
Nett Weight	17 kg
Packaged Weight	17.5 kg

Packaging Details

Box Qty	1
Label Size (mm)	100 x 50
Label Colour	White
Label Qty	2.0000

Product Details

Country of Origin	China
Product Material	Vitreous China
Colour/Finish	White
Style	Contemporary
Fixings Included	No
Bottle Trap Included	No
Ce Certified	Yes
Inner Bowl Height	120 mm
No. Of Tapholes	1
Number Of Bowls	1
Overflow Cover Included	No
Overflow Included	Yes
Tap Included	No
Waste Included	No
Waste Size Required	1.5" (70mm flange)

© ROXOR Group

Sales Code: CLS826 **Barcode:** 5056817730185 **Brand:** Old London **Description:** Old London Ashwick 800mm Satin Green 2 Door Foor Standing Vanity



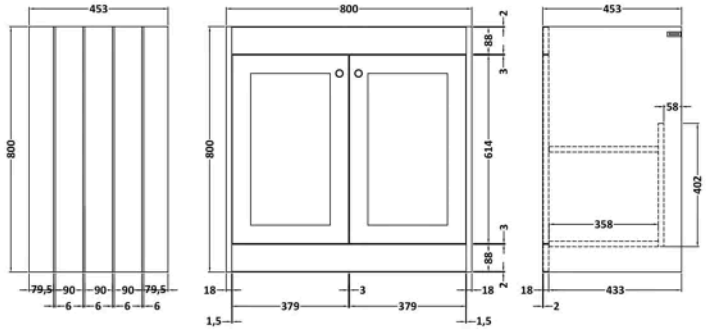

Product Dimensions

Product	800 x 800 x 453mm (H x W x D)
Packaged	835 x 825 x 480mm (H x W x D)
Nett Weight	30.5 kg
Packaged Weight	31 kg

Packaging Details

Box Qty	1

Product Details

Country of Origin	China
Product Material	Mfc Painted Matt
Colour/Finish	Satin Green
Mount Type	Floor
Style	Traditional
Handle Type	Knob
Construction Method	Cam & Wood Dowel
Construction Type	Rigid
Fascia Finish	Mdf Painted Matt
Handles Included	Yes
Material Thickness	16 mm
No. Doors	2
No. Shelves	1
Number Of Shelves	1

© ROXOR Group