**Sales Code:** CLS826BR3

**Barcode:** 5064007013482

**Brand:** Old London

**Description:** Old London Ashwick Satin Green 800mm Floorstanding 2-Door Unit With Marble Top 3 Tap Hole



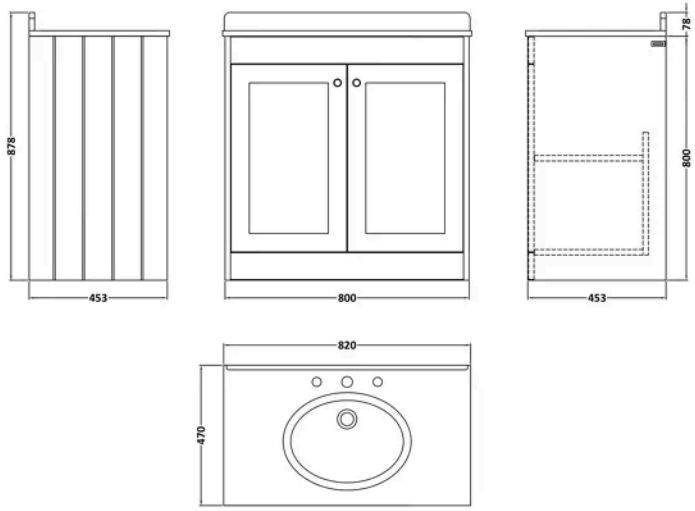


## Product Dimensions

| | |
|---|---|
| Product | 814 x 820 x 463mm (H x W x D) |
| Packaged | 550 x 550 x 550mm (H x W x D) |
| Nett Weight | 48 kg |
| Packaged Weight | 48.5 kg |

## Packaging Details

| | |
|---|---|
| Box Qty | 2 |

## Product Details

| | |
|---|---|
| Country of Origin | China |
| Product Material | Mfc Painted Matt |
| Colour/Finish | Satin Green |
| Mount Type | Floor |
| Style | Traditional |
| Handle Type | Knob |
| Construction Method | Cam & Wood Dowel |
| Construction Type | Rigid |
| Fascia Finish | Mfc Painted Matt |
| Handles Included | Yes |
| Inner Bowl Depth | 272 mm |
| Inner Bowl Height | 160 mm |
| Inner Bowl Width | 358 mm |
| Leg Set Included | No |
| Material Thickness | 16 mm |
| No. Doors | 2 |
| No. Of Tapholes | 3 |
| No. Shelves | 1 |
| Number Of Bowls | 1 |
| Number Of Shelves | 1 |
| Overflow Cover Included | Yes |
| Overflow Included | Yes |
| Tap Included | No |
| Waste Included | No |

© ROXOR Group

**Sales Code:** CLS826 **Barcode:** 5056817730185 **Brand:** Old London **Description:** Old London Ashwick 800mm Satin Green 2 Door Foor Standing Vanity



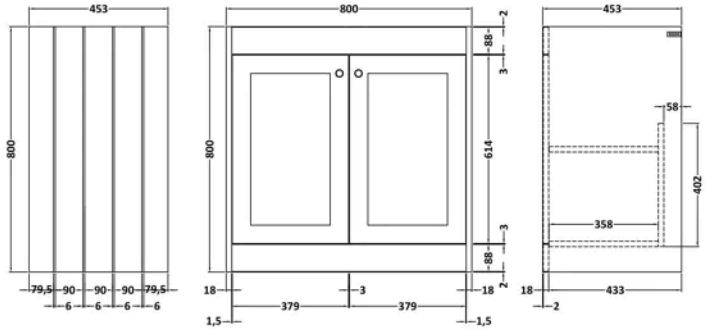


## Product Dimensions

| | |
|---|---|
| Product | 800 x 800 x 453mm (H x W x D) |
| Packaged | 835 x 825 x 480mm (H x W x D) |
| Nett Weight | 30.5 kg |
| Packaged Weight | 31 kg |

## Packaging Details

| | |
|---|---|
| Box Qty | 1 |

## Product Details

| | |
|---|---|
| Country of Origin | China |
| Product Material | Mfc Painted Matt |
| Colour/Finish | Satin Green |
| Mount Type | Floor |
| Style | Traditional |
| Handle Type | Knob |
| Construction Method | Cam & Wood Dowel |
| Construction Type | Rigid |
| Fascia Finish | Mdf Painted Matt |
| Handles Included | Yes |
| Material Thickness | 16 mm |
| No. Doors | 2 |
| No. Shelves | 1 |
| Number Of Shelves | 1 |

© ROXOR Group

**Sales Code:** LOM230 **Barcode:** 5056211819059 **Brand:** Old London **Description:** Old London 3 Tap Hole 800mm Black Single Bowl Marble Top Basin



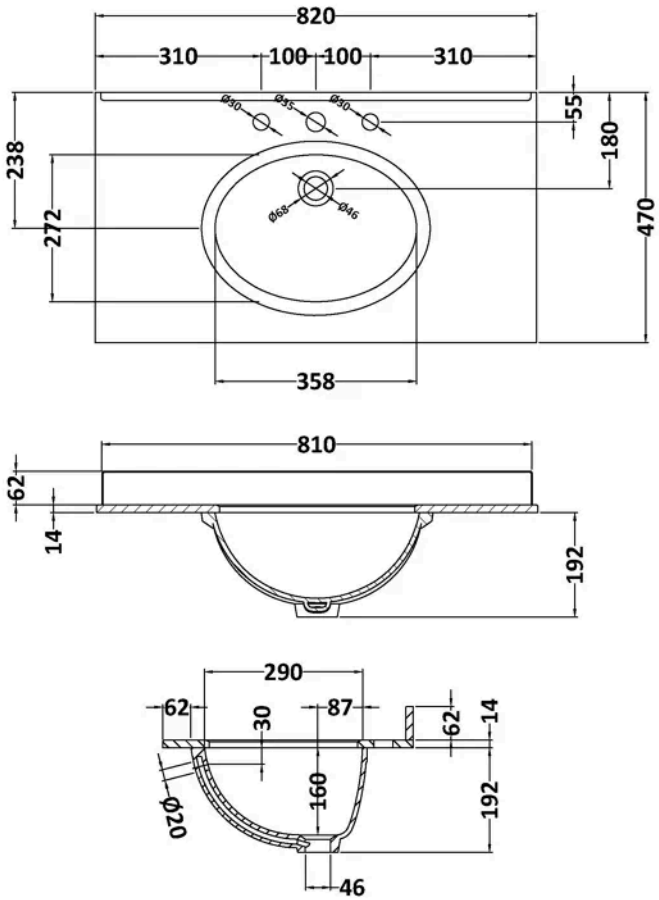


## Product Dimensions

| | |
|---|---|
| Product | 268 x 820 x 463mm (H x W x D) |
| Packaged | 310 x 900 x 550mm (H x W x D) |
| Nett Weight | 18 kg |
| Packaged Weight | 18.5 kg |

## Packaging Details

| | |
|---|---|
| Box Qty | 1 |

## Product Details

| | |
|---|---|
| Country of Origin | China |
| Product Material | Vitreous China |
| Colour/Finish | Black |
| Inner Bowl Height | 160 mm |
| No. Of Tapholes | 3 |
| Number Of Bowls | 1 |

© ROXOR Group