**Sales Code:** CLS825BR2

**Barcode:** 5064007021159

**Brand:** Old London

**Description:** Old London Ashwick Satin Green 1200mm Floorstanding 4-Door Unit With Double Marble Top 1 Tap Hole



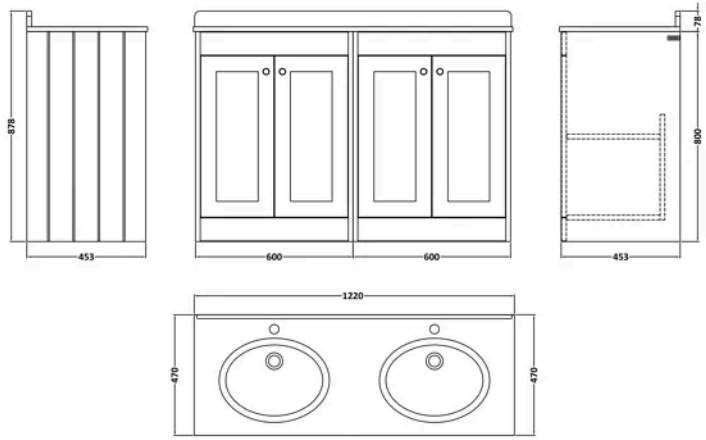


## Product Dimensions

| | |
|---|---|
| Product | 814 x 1200 x 463mm (H x W x D) |
| Packaged | 800 x 1200 x 453mm (H x W x D) |
| Nett Weight | 79.6 kg |
| Packaged Weight | 79.6 kg |

## Product Details

| | |
|---|---|
| Country of Origin | China |
| Product Material | Mfc Painted Matt |
| Colour/Finish | Satin Green |
| Mount Type | Floor |
| Style | Traditional |
| Handle Type | Knob |
| Construction Method | Cam & Wood Dowel |
| Construction Type | Rigid |
| Fascia Finish | Mfc Painted Matt |
| Handles Included | Yes |
| Inner Bowl Depth | 272 mm |
| Inner Bowl Height | 160 mm |
| Inner Bowl Width | 358 mm |
| Leg Set Included | No |
| Material Thickness | 16 mm |
| No. Doors | 4 |
| No. Of Tapholes | 1 |
| No. Shelves | 1 |
| Number Of Bowls | 2 |
| Number Of Shelves | 1 |
| Overflow Cover Included | Yes |
| Overflow Included | Yes |
| Tap Included | No |
| Waste Included | No |

© ROXOR Group

**Sales Code:** CLS825 **Barcode:** 5056817730130 **Brand:** nuie **Description:** Old London Ashwick 600mm Satin Green 2 Door Floor Standing Vanity



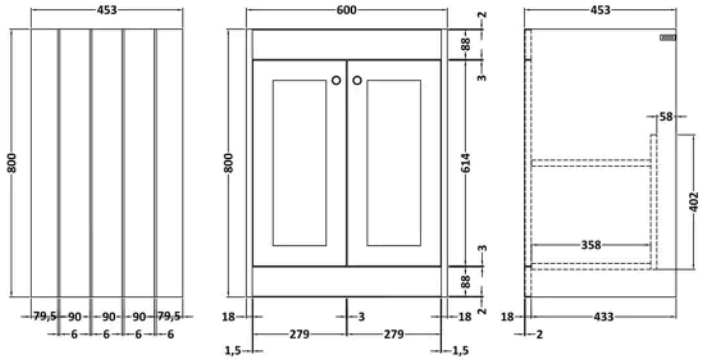


## Product Dimensions

| | |
|---|---|
| Product | 800 x 600 x 453mm (H x W x D) |
| Packaged | 835 x 625 x 480mm (H x W x D) |
| Nett Weight | 25.3 kg |
| Packaged Weight | 25.8 kg |

## Packaging Details

| | |
|---|---|
| Box Qty | 1 |

## Product Details

| | |
|---|---|
| Country of Origin | China |
| Product Material | Mfc Painted Matt |
| Colour/Finish | Satin Green |
| Mount Type | Floor |
| Style | Traditional |
| Handle Type | Knob |
| Construction Method | Cam & Wood Dowel |
| Construction Type | Rigid |
| Fascia Finish | Mdf Painted Matt |
| Handles Included | Yes |
| Material Thickness | 16 mm |
| No. Doors | 2 |
| No. Shelves | 1 |
| Number Of Shelves | 1 |

© ROXOR Group

**Sales Code:** LOM233 **Barcode:** 5056211819080 **Brand:** Old London **Description:** Old London 1 Tap Hole 1200mm Black Double Bowl Marble Top Basin



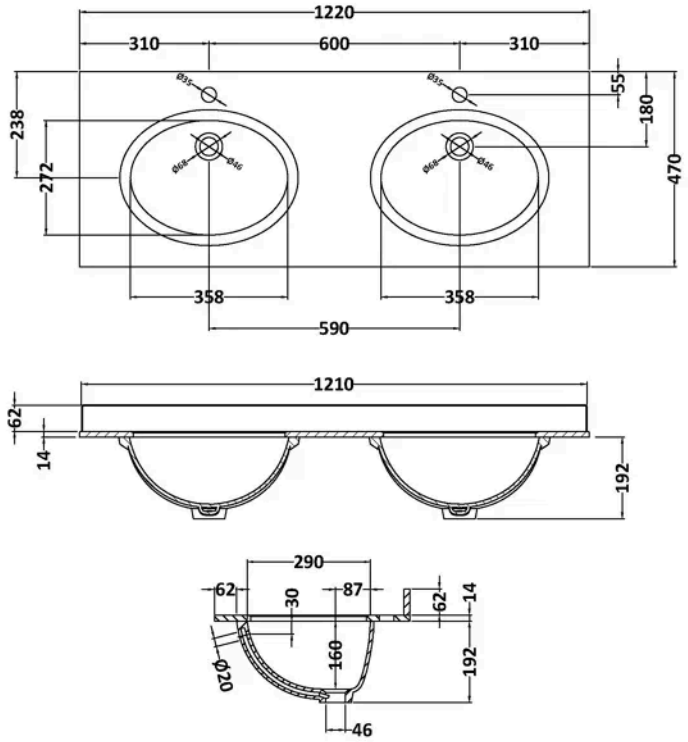


## Product Dimensions

| | |
|---|---|
| Product | 268 x 1220 x 463mm (H x W x D) |
| Packaged | 310 x 1300 x 550mm (H x W x D) |
| Nett Weight | 27.5 kg |
| Packaged Weight | 28 kg |

## Packaging Details

| | |
|---|---|
| Box Qty | 1 |

## Product Details

| | |
|---|---|
| Country of Origin | China |
| Product Material | Vitreous China |
| Colour/Finish | Black |
| Inner Bowl Height | 160 mm |
| No. Of Tapholes | 1 |
| Number Of Bowls | 2 |

© ROXOR Group