**Sales Code:** CLS3294BR3

**Barcode:** 5064007014663

**Brand:** Old London

**Description:** Old London Ashwick Pebble Grey 600mm Wall Hung 1-Drawer Unit With Marble Top 3 Tap Hole



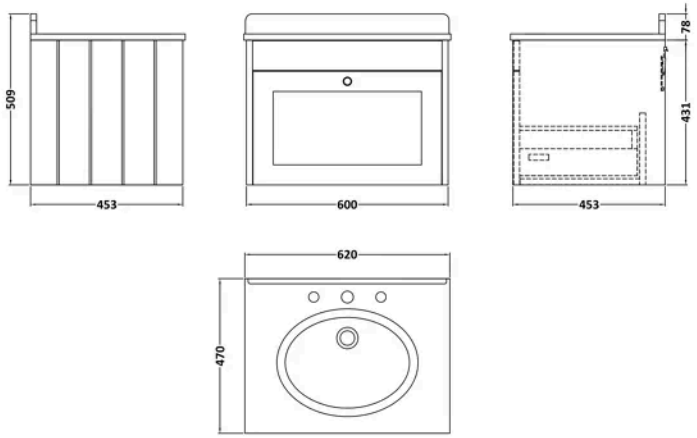


## Product Dimensions

| | |
|---|---|
| Product | 445 x 620 x 463mm (H x W x D) |
| Packaged | 550 x 550 x 550mm (H x W x D) |
| Nett Weight | 32 kg |
| Packaged Weight | 32.5 kg |

## Packaging Details

| | |
|---|---|
| Box Qty | 2 |

## Product Details

| | |
|---|---|
| Country of Origin | China |
| Product Material | Mfc Painted Matt |
| Colour/Finish | Pebble Grey |
| Mount Type | Wall Hung |
| Style | Traditional |
| Handle Type | Knob |
| Construction Method | Cam & Wood Dowel |
| Construction Type | Rigid |
| Drawer Type | 80mm High Metal S/C Inc Gallery |
| Fascia Finish | Mfc Painted Matt |
| Handles Included | Yes |
| Inner Bowl Depth | 272 mm |
| Inner Bowl Height | 160 mm |
| Inner Bowl Width | 358 mm |
| Leg Set Included | No |
| Material Thickness | 16 mm |
| No. Drawers | 1 |
| No. Of Tapholes | 3 |
| Number Of Bowls | 1 |
| Overflow Cover Included | Yes |
| Overflow Included | Yes |
| Tap Included | No |
| Waste Included | No |

© ROXOR Group

**Sales Code:** CLS3294 **Barcode:** 5056817730291 **Brand:** nuie **Description:** Old London Ashwick 600mm Satin Pebble Grey 1 Drawer Wall Hung Vanity



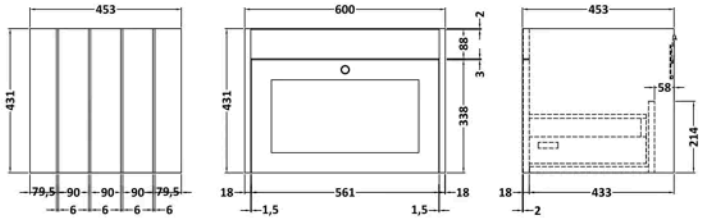


## Product Dimensions

| | |
|---|---|
| Product | 431 x 600 x 453mm (H x W x D) |
| Packaged | 465 x 625 x 480mm (H x W x D) |
| Nett Weight | 19 kg |
| Packaged Weight | 19.5 kg |

## Packaging Details

| | |
|---|---|
| Box Qty | 1 |

## Product Details

| | |
|---|---|
| Country of Origin | China |
| Product Material | Mfc Painted Matt |
| Colour/Finish | Satin Pebble Grey |
| Mount Type | Wall Hung |
| Style | Traditional |
| Handle Type | Knob |
| Construction Method | Cam & Wood Dowel |
| Construction Type | Rigid |
| Drawer Type | 80mm High Metal S/C Inc Gallery |
| Fascia Finish | Mdf Painted Matt |
| Handles Included | Yes |
| Material Thickness | 16 mm |
| No. Drawers | 1 |
| Waste Shroud | Yes |

© ROXOR Group

**Sales Code:** LOM224 **Barcode:** 5056211818991 **Brand:** Old London **Description:** Old London 3 Tap Hole 600mm Black Single Bowl Marble Top Basin



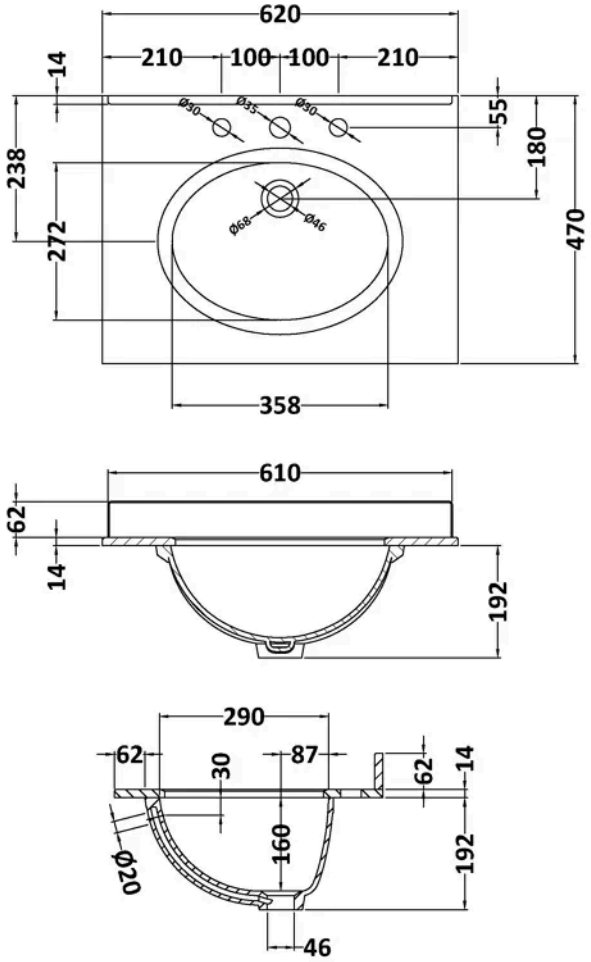


## Product Dimensions

| | |
|---|---|
| Product | 268 x 620 x 463mm (H x W x D) |
| Packaged | 310 x 700 x 550mm (H x W x D) |
| Nett Weight | 13.5 kg |
| Packaged Weight | 14 kg |

## Packaging Details

| | |
|---|---|
| Box Qty | 1 |

## Product Details

| | |
|---|---|
| Country of Origin | China |
| Product Material | Vitreous China |
| Colour/Finish | Black |
| Inner Bowl Height | 160 mm |
| No. Of Tapholes | 3 |
| Number Of Bowls | 1 |

© ROXOR Group