Sales Code: CLS3225WS1

Barcode: 5064007014328

Brand: Old London

Description: Old London Ashwick Pebble Grey 600mm Floorstanding 2-Door Unit With Marble Top 1 Tap Hole



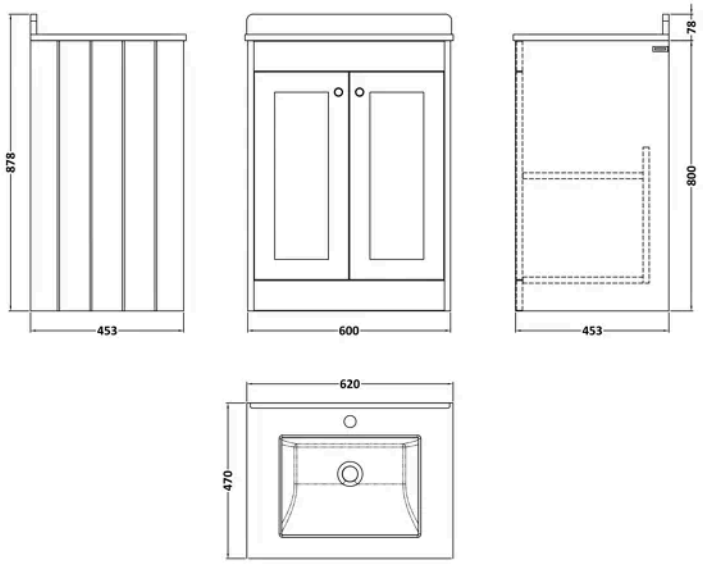

Product Dimensions

Product	814 x 620 x 463mm (H x W x D)
Packaged	550 x 550 x 550mm (H x W x D)
Nett Weight	41.3 kg
Packaged Weight	41.8 kg

Product Details

Country of Origin	China
Product Material	Mfc Painted Matt
Colour/Finish	Pebble Grey
Mount Type	Floor
Style	Traditional
Handle Type	Knob
Construction Method	Cam & Wood Dowel
Construction Type	Rigid
Fascia Finish	Mfc Painted Matt
Handles Included	Yes
Inner Bowl Depth	272 mm
Inner Bowl Height	160 mm
Inner Bowl Width	358 mm
Leg Set Included	No
Material Thickness	16 mm
No. Doors	2
No. Of Tapholes	1
No. Shelves	1
Number Of Bowls	1
Number Of Shelves	1
Overflow Cover Included	Yes
Overflow Included	Yes
Tap Included	No
Waste Included	No

© ROXOR Group

Sales Code: CLS3225 **Barcode:** 5056817730147 **Brand:** nuie **Description:** Old London Ashwick 600mm Satin Pebble Grey 2 Door Floor Standing Vanity



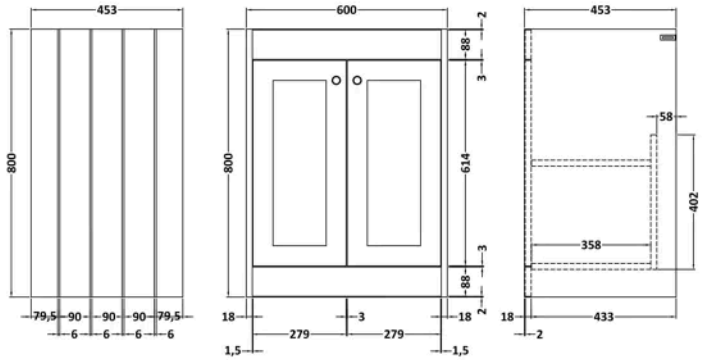

Product Dimensions

Product	800 x 600 x 453mm (H x W x D)
Packaged	835 x 625 x 480mm (H x W x D)
Nett Weight	25.3 kg
Packaged Weight	25.8 kg

Product Details

Country of Origin	China
Product Material	Mfc Painted Matt
Colour/Finish	Satin Pebble Grey
Mount Type	Floor
Style	Traditional
Handle Type	Knob
Construction Method	Cam & Wood Dowel
Construction Type	Rigid
Fascia Finish	Mdf Painted Matt
Handles Included	Yes
Material Thickness	16 mm
No. Doors	2
No. Shelves	1
Number Of Shelves	1

© ROXOR Group

Sales Code: LSM222 **Barcode:** 5056462655864 **Brand:** Old London **Description:** 1 Tap Hole 600mm White Single Square Bowl Marble Worktop Basin



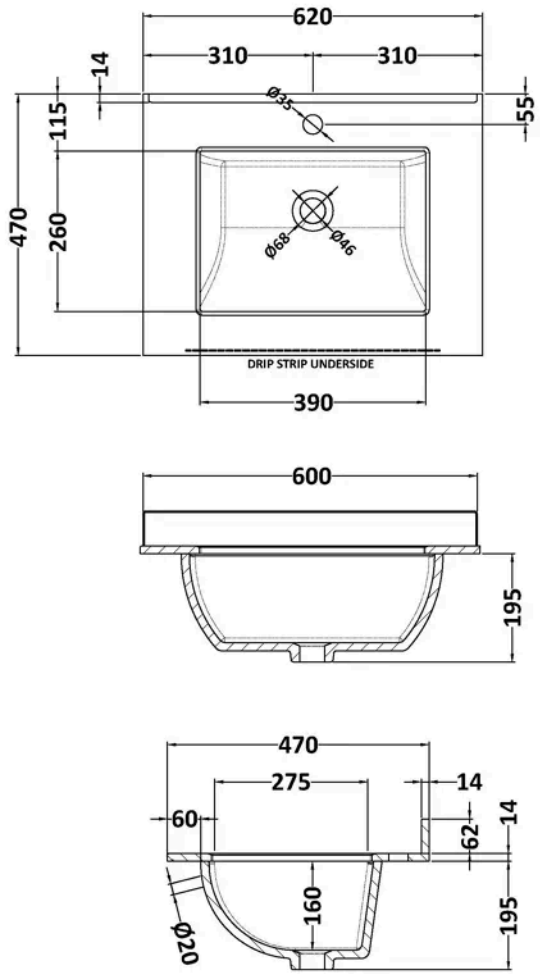

Product Dimensions

Product	209 x 620 x 470mm (H x W x D)
Packaged	250 x 700 x 580mm (H x W x D)
Nett Weight	16.5 kg
Packaged Weight	17 kg

Packaging Details

Label Size (mm)	50 x 100
Label Colour	White
Label Qty	2.0000

Product Details

Country of Origin	China
Product Material	Vitreous China
Colour/Finish	White
Style	Traditional
Bottle Trap Included	No
Ce Certified	Yes
Inner Bowl Depth	275 mm
Inner Bowl Height	160 mm
Inner Bowl Width	390 mm
No. Of Tapholes	1
Number Of Bowls	1
Overflow Cover Included	No
Overflow Included	Yes
Tap Included	No
Waste Included	No

© ROXOR Group