Sales Code: CLS291B **Barcode:** 5064007012539 **Brand:** Old London **Description:** Old London Ashwick Satin Grey 500mm Wall Hung 1-Drawer Unit With Basin 3 Tap Hole



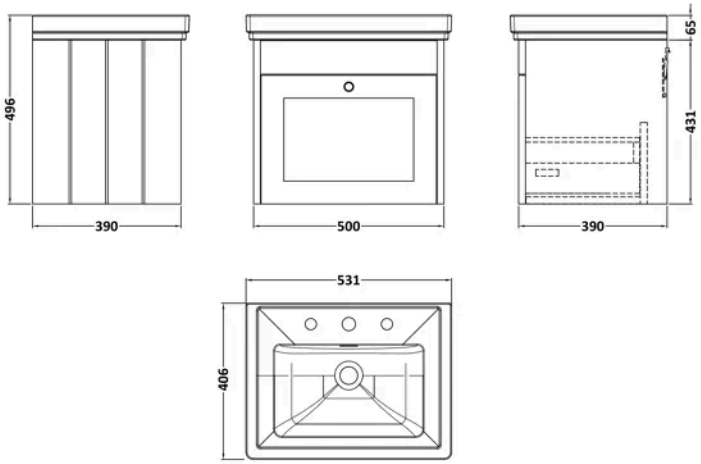

Product Dimensions

Product	496 x 531 x 406mm (H x W x D)
Packaged	550 x 550 x 550mm (H x W x D)
Nett Weight	28.2 kg
Packaged Weight	28.7 kg

Product Details

Country of Origin	China
Product Material	Mfc Painted Matt
Colour/Finish	Satin Grey
Mount Type	Wall Hung
Style	Traditional
Handle Type	Knob
Construction Method	Cam & Wood Dowel
Construction Type	Rigid
Drawer Type	80mm High Metal S/C Inc Gallery
Fascia Finish	Mfc Painted Matt
Handles Included	Yes
Inner Bowl Depth	234 mm
Inner Bowl Height	136 mm
Inner Bowl Width	381 mm
Leg Set Included	No
Material Thickness	16 mm
No. Drawers	1
No. Of Tapholes	3
Number Of Bowls	1
Overflow Cover Included	Yes
Overflow Included	Yes
Tap Included	No
Waste Included	No

© ROXOR Group

Sales Code: CBM532 **Barcode:** 5056462643649 **Brand:** nuie **Description:** 3 Tap Hole 500mm Traditional Fireclay Basin



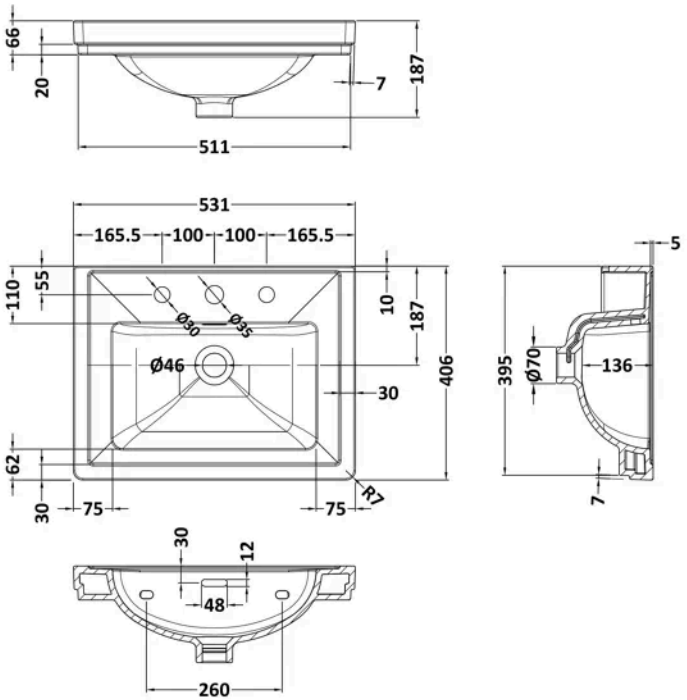

Product Dimensions

Product	187 x 531 x 406mm (H x W x D)
Packaged	430 x 550 x 220mm (H x W x D)
Nett Weight	13.5 kg
Packaged Weight	13.5 kg

Product Details

Country of Origin	United Arab Emirates
Product Material	Fireclay
Colour/Finish	White
Style	Contemporary
Ce Certified	Yes
Inner Bowl Height	136 mm
No. Of Tapholes	3
Number Of Bowls	1
Overflow Included	Yes
Tap Included	No
Waste Included	No

© ROXOR Group

Sales Code: CLS291 **Barcode:** 5056817730222 **Brand:** nuie **Description:** Old London Ashwick 500mm Satin Grey 1 Drawer Wall Hung Vanity



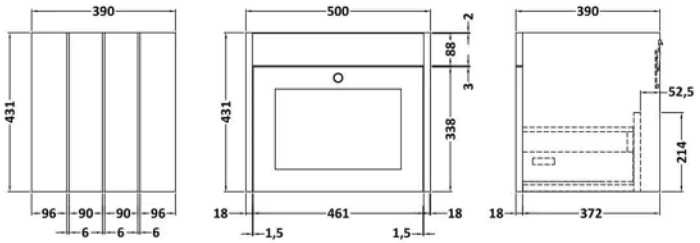

Product Dimensions

Product	431 x 500 x 390mm (H x W x D)
Packaged	465 x 525 x 415mm (H x W x D)
Nett Weight	15.2 kg
Packaged Weight	15.7 kg

Product Details

Country of Origin	China
Product Material	Mfc Painted Matt
Colour/Finish	Satin Grey
Mount Type	Wall Hung
Style	Traditional
Handle Type	Knob
Construction Method	Cam & Wood Dowel
Construction Type	Rigid
Drawer Type	80mm High Metal S/C Inc Gallery
Fascia Finish	Mdf Painted Matt
Handles Included	Yes
Material Thickness	16 mm
No. Drawers	1
Waste Shroud	Yes

© ROXOR Group