Sales Code: CLS225M

Barcode: 5064007012225

Brand: Old London

Description: Old London Ashwick Satin Grey 600mm Floorstanding 2-Door Unit With Basin 3 Tap Hole



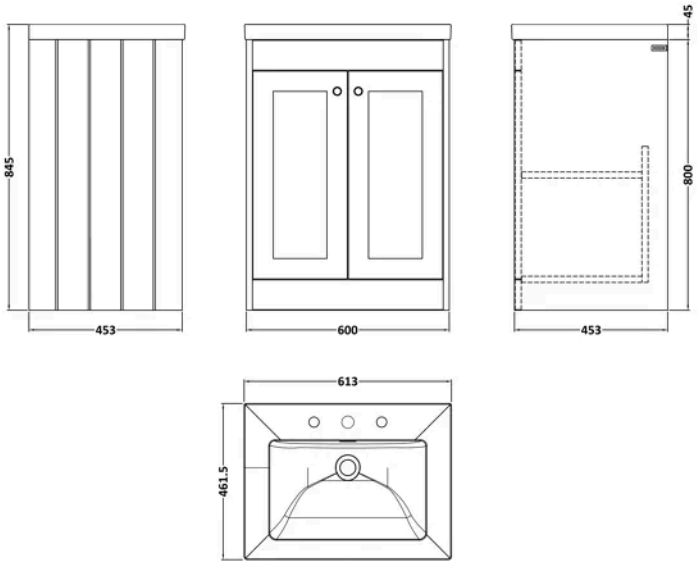

Product Dimensions

Product	845 x 613 x 462mm (H x W x D)
Packaged	800 x 600 x 453mm (H x W x D)
Nett Weight	41.8 kg
Packaged Weight	42.3 kg

Product Details

Country of Origin	China
Product Material	Mfc Painted Matt
Colour/Finish	Satin Grey
Mount Type	Floor
Style	Traditional
Handle Type	Knob
Construction Method	Cam & Wood Dowel
Construction Type	Rigid
Fascia Finish	Mfc Painted Matt
Handles Included	Yes
Inner Bowl Depth	300 mm
Inner Bowl Height	135 mm
Inner Bowl Width	480 mm
Leg Set Included	No
Material Thickness	16 mm
No. Doors	2
No. Of Tapholes	3
No. Shelves	1
Number Of Bowls	1
Number Of Shelves	1
Overflow Cover Included	Yes
Overflow Included	Yes
Tap Included	No
Waste Included	No

© ROXOR Group

Sales Code: CBM633 **Barcode:** 5056678485248 **Brand:** nuie **Description:** 3 Tap Hole 600mm Contemporary Fireclay Basin



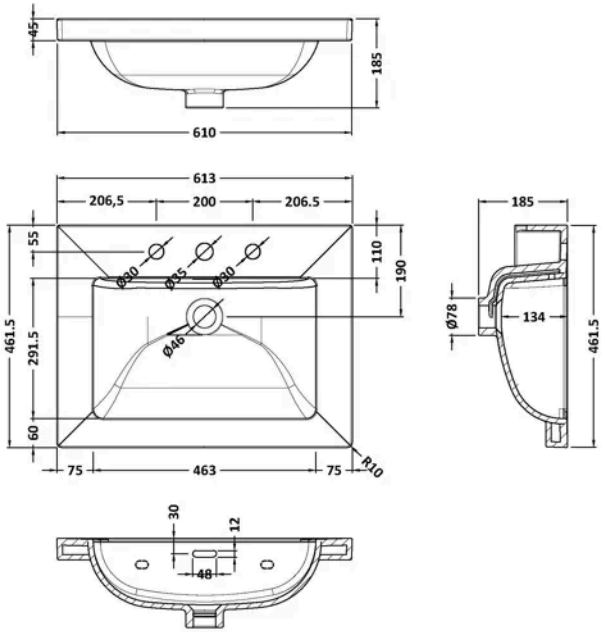

Product Dimensions

Product	45 x 610 x 460mm (H x W x D)
Packaged	490 x 650 x 220mm (H x W x D)
Nett Weight	17 kg
Packaged Weight	17 kg

Packaging Details

Box Qty	1
Label Size (mm)	100 x 50
Label Colour	White
Label Qty	2.0000

Product Details

Country of Origin	United Arab Emirates
Product Material	Fireclay
Colour/Finish	White
Style	Contemporary
Fixings Included	No
Bottle Trap Included	No
Ce Certified	Yes
Inner Bowl Depth	300 mm
Inner Bowl Height	135 mm
Inner Bowl Width	480 mm
No. Of Tapholes	3
Number Of Bowls	1
Overflow Cover Included	No
Overflow Included	Yes
Tap Included	No
Waste Included	No

© ROXOR Group

Sales Code: CLS225 **Barcode:** 5056817730123 **Brand:** Old London **Description:** Old London Ashwick 600mm Satin Grey 2 Door Floor Standing Vanity



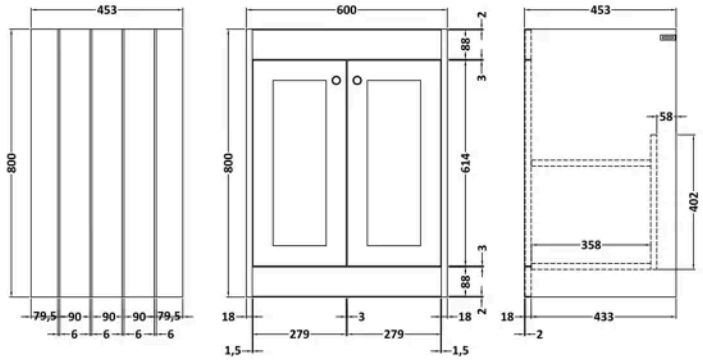

Product Dimensions

Product	800 x 600 x 453mm (H x W x D)
Packaged	835 x 625 x 480mm (H x W x D)
Nett Weight	25.3 kg
Packaged Weight	25.8 kg

Packaging Details

Box Qty	1

Product Details

Country of Origin	China
Product Material	Mfc Painted Matt
Colour/Finish	Satin Grey
Mount Type	Floor
Style	Traditional
Handle Type	Knob
Construction Method	Cam & Wood Dowel
Construction Type	Rigid
Fascia Finish	Mdf Painted Matt
Handles Included	Yes
Material Thickness	16 mm
No. Doors	2
No. Shelves	1
Number Of Shelves	1

© ROXOR Group