**Sales Code:** CLS196WS1

**Barcode:** 5064007011976

**Brand:** Old London

**Description:** Old London Ashwick Satin White 800mm Wall Hung 1-Drawer Unit With Marble Top 1 Tap Hole



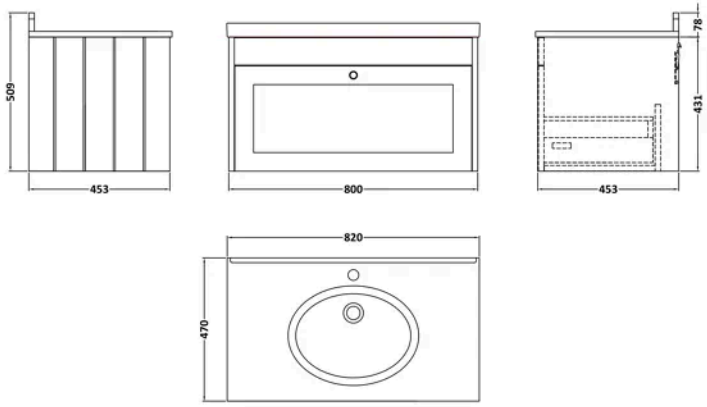


## Product Dimensions

| | |
|---|---|
| Product | 445 x 820 x 463mm (H x W x D) |
| Packaged | 550 x 550 x 550mm (H x W x D) |
| Nett Weight | 43 kg |
| Packaged Weight | 43.5 kg |

## Product Details

| | |
|---|---|
| Country of Origin | China |
| Product Material | Mfc Painted Matt |
| Colour/Finish | Satin White |
| Mount Type | Wall Hung |
| Style | Traditional |
| Handle Type | Knob |
| Construction Method | Cam & Wood Dowel |
| Construction Type | Rigid |
| Drawer Type | 80mm High Metal S/C Inc Gallery |
| Fascia Finish | Mfc Painted Matt |
| Handles Included | Yes |
| Inner Bowl Depth | 272 mm |
| Inner Bowl Height | 160 mm |
| Inner Bowl Width | 358 mm |
| Leg Set Included | No |
| Material Thickness | 16 mm |
| No. Drawers | 1 |
| No. Of Tapholes | 1 |
| Number Of Bowls | 1 |
| Overflow Cover Included | Yes |
| Overflow Included | Yes |
| Tap Included | No |
| Waste Included | No |

© ROXOR Group

**Sales Code:** CLS196 **Barcode:** 5056817730314 **Brand:** Old London **Description:** Old London Ashwick 800mm Satin White 1 Drawer Wall Hung Vanity



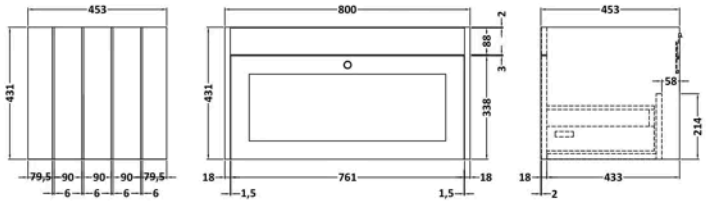


## Product Dimensions

| | |
|---|---|
| Product | 431 x 800 x 453mm (H x W x D) |
| Packaged | 465 x 825 x 480mm (H x W x D) |
| Nett Weight | 23 kg |
| Packaged Weight | 23.5 kg |

## Packaging Details

| | |
|---|---|
| Box Qty | 1 |

## Product Details

| | |
|---|---|
| Country of Origin | China |
| Product Material | Mfc Painted Matt |
| Colour/Finish | Satin White |
| Mount Type | Wall Hung |
| Style | Traditional |
| Handle Type | Knob |
| Construction Method | Cam & Wood Dowel |
| Construction Type | Rigid |
| Drawer Type | 80mm High Metal S/C Inc Gallery |
| Fascia Finish | Mdf Painted Matt |
| Handles Included | Yes |
| Material Thickness | 16 mm |
| No. Drawers | 1 |
| Waste Shroud | Yes |

© ROXOR Group

**Sales Code:** LSM228 **Barcode:** 5056462655925 **Brand:** Old London **Description:** 1 Tap Hole 800mm White Single Square Bowl Marble Worktop Basin



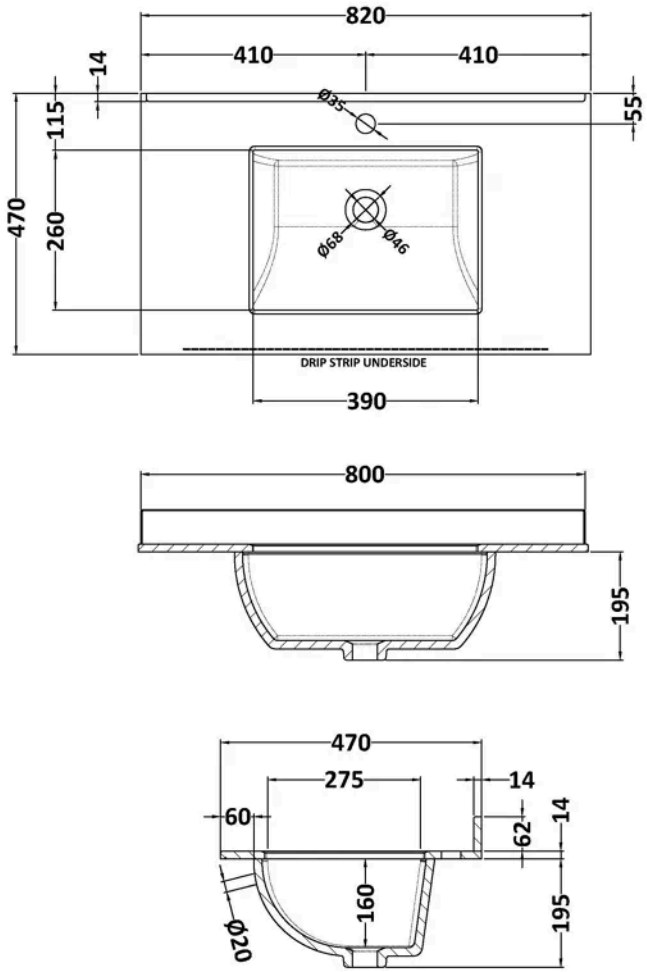


## Product Dimensions

| | |
|---|---|
| Product | 209 x 820 x 463mm (H x W x D) |
| Packaged | 250 x 900 x 580mm (H x W x D) |
| Nett Weight | 20.5 kg |
| Packaged Weight | 21 kg |

## Packaging Details

| | |
|---|---|
| Box Qty | 1 |
| Label Size (mm) | 50 x 100 |
| Label Colour | White |
| Label Qty | 2.0000 |

## Product Details

| | |
|---|---|
| Country of Origin | China |
| Product Material | Vitreous China |
| Colour/Finish | White |
| Style | Traditional |
| Bottle Trap Included | No |
| Ce Certified | Yes |
| Inner Bowl Depth | 275 mm |
| Inner Bowl Height | 160 mm |
| Inner Bowl Width | 390 mm |
| No. Of Tapholes | 1 |
| Number Of Bowls | 1 |
| Overflow Cover Included | No |
| Overflow Included | Yes |
| Tap Included | No |
| Waste Included | No |

© ROXOR Group