Sales Code: CLS1496P

Barcode: 5064007011310

Brand: Old London

Description: Old London Ashwick Soft Black 800mm Satin Wall Hung 1-Drawer Unit With Stone Basin 1 Tap Hole



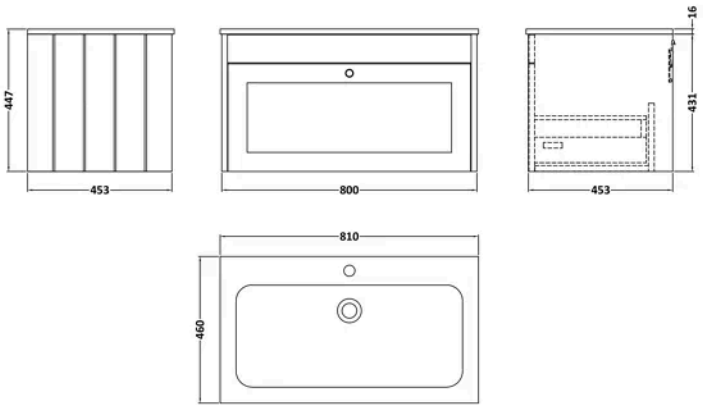

Product Dimensions

Product	447 x 805 x 460mm (H x W x D)
Packaged	465 x 825 x 480mm (H x W x D)
Nett Weight	38.5 kg
Packaged Weight	39 kg

Product Details

Country of Origin	China
Product Material	Mfc Painted Matt,Stone
Colour/Finish	Soft Black
Mount Type	Wall Hung
Style	Traditional
Handle Type	Knob
Construction Method	Cam & Wood Dowel
Construction Type	Rigid
Drawer Type	80mm High Metal S/C Inc Gallery
Fascia Finish	Mfc Painted Matt
Handles Included	Yes
Inner Bowl Height	128 mm
Leg Set Included	No
Material Thickness	16 mm
No. Drawers	1
No. Of Tapholes	1
Number Of Bowls	1
Overflow Cover Included	Yes
Overflow Included	Yes
Tap Included	No
Waste Included	No

© ROXOR Group

Sales Code: CLS1496 **Barcode:** 5056817730352 **Brand:** Old London **Description:** Old London Ashwick 800mm Soft Black 1 Drawer Wall Hung Vanity



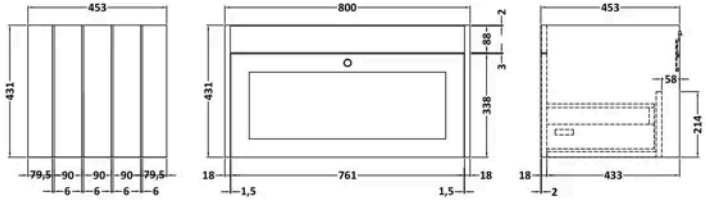

Product Dimensions

Product	431 x 800 x 453mm (H x W x D)
Packaged	465 x 825 x 480mm (H x W x D)
Nett Weight	23 kg
Packaged Weight	23.5 kg

Packaging Details

Box Qty	1

Product Details

Country of Origin	China
Product Material	Mfc Painted Matt
Colour/Finish	Soft Black
Mount Type	Wall Hung
Style	Traditional
Handle Type	Knob
Construction Method	Cam & Wood Dowel
Construction Type	Rigid
Drawer Type	80mm High Metal S/C Inc Gallery
Fascia Finish	Mdf Painted Matt
Handles Included	Yes
Material Thickness	16 mm
No. Drawers	1
Waste Shroud	Yes

© ROXOR Group

Sales Code: SBM105 **Barcode:** 5056678424346 **Brand:** nuie **Description:** 800mm 1 Tap Hole White Stone Furniture Basin



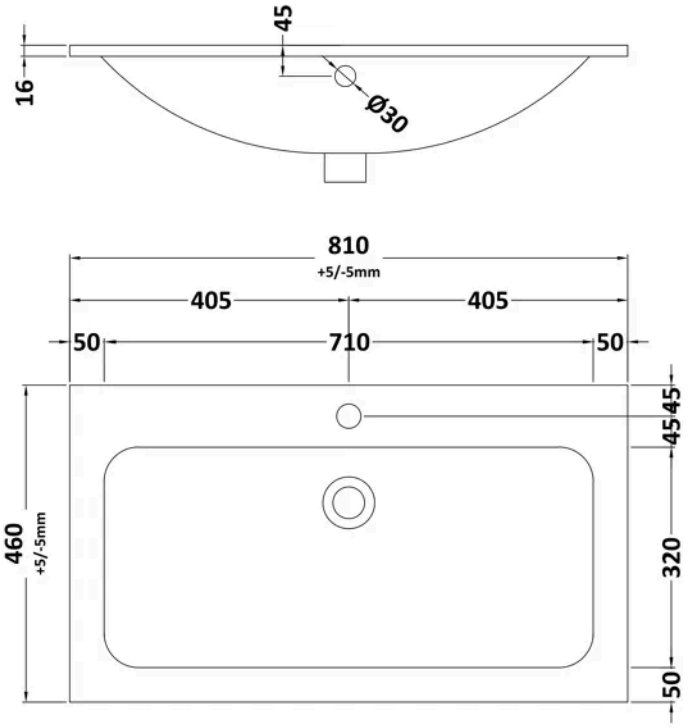

Product Dimensions

Product	810 x 460mm (W x D)
Packaged	200 x 875 x 530mm (H x W x D)
Nett Weight	16 kg
Packaged Weight	16.5 kg

Packaging Details

Box Qty	1

Product Details

Country of Origin	China
Product Material	Stone
Colour/Finish	Matt White
Style	Contemporary
Bottle Trap Included	No
Ce Certified	Yes
Inner Bowl Depth	320 mm
Inner Bowl Height	128 mm
Inner Bowl Width	710 mm
No. Of Tapholes	1
Number Of Bowls	1
Overflow Cover Included	Yes
Overflow Included	Yes
Tap Included	No
Waste Included	No

© ROXOR Group