Sales Code: CLS1496E **Barcode:** 5064007011211 **Brand:** Old London **Description:** Old London Ashwick Soft Black 800mm Satin Wall Hung 1-Drawer Unit with Basin 1 TH



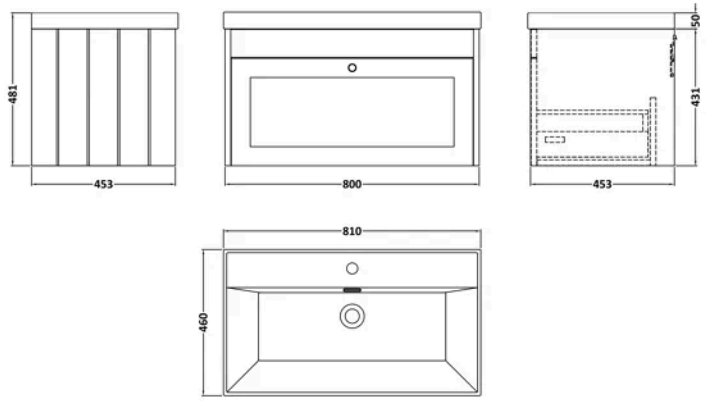

Product Dimensions

Product	481 x 810 x 460mm (H x W x D)
Packaged	431 x 800 x 453mm (H x W x D)
Nett Weight	40 kg
Packaged Weight	40.5 kg

Product Details

Country of Origin	China
Product Material	Mfc Painted Matt
Colour/Finish	Soft Black
Mount Type	Wall Hung
Style	Traditional
Handle Type	Knob
Construction Method	Cam & Wood Dowel
Construction Type	Rigid
Drawer Type	80mm High Metal S/C Inc Gallery
Fascia Finish	Mfc Painted Matt
Handles Included	Yes
Inner Bowl Depth	270 mm
Inner Bowl Height	125 mm
Inner Bowl Width	600 mm
Leg Set Included	No
Material Thickness	16 mm
No. Drawers	1
No. Of Tapholes	1
Number Of Bowls	1
Overflow Cover Included	Yes
Overflow Included	Yes
Tap Included	No
Waste Included	No

© ROXOR Group

Sales Code: CLS1496 **Barcode:** 5056817730352 **Brand:** Old London **Description:** Old London Ashwick 800mm Soft Black 1 Drawer Wall Hung Vanity



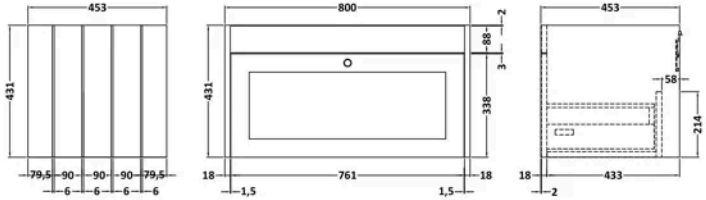

Product Dimensions

Product	431 x 800 x 453mm (H x W x D)
Packaged	465 x 825 x 480mm (H x W x D)
Nett Weight	23 kg
Packaged Weight	23.5 kg

Packaging Details

Box Qty	1

Product Details

Country of Origin	China
Product Material	Mfc Painted Matt
Colour/Finish	Soft Black
Mount Type	Wall Hung
Style	Traditional
Handle Type	Knob
Construction Method	Cam & Wood Dowel
Construction Type	Rigid
Drawer Type	80mm High Metal S/C Inc Gallery
Fascia Finish	Mdf Painted Matt
Handles Included	Yes
Material Thickness	16 mm
No. Drawers	1
Waste Shroud	Yes

© ROXOR Group

Sales Code: NVM065 **Barcode:** 5056678484876 **Brand:** nuie **Description:** 1 Tap Hole 800mm Thin Edge Ceramic Basin



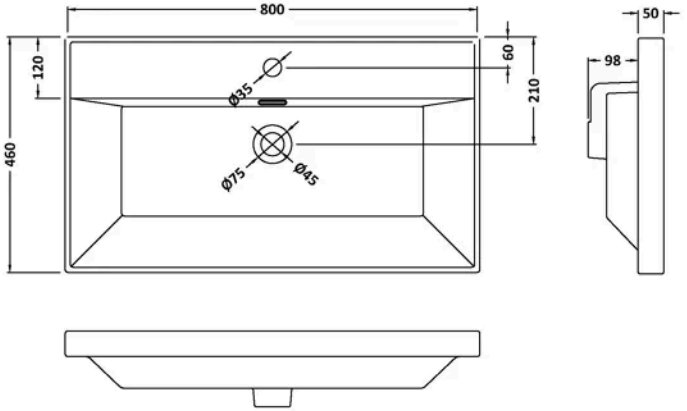

Product Dimensions

Product	148 x 800 x 460mm (H x W x D)
Packaged	170 x 825 x 480mm (H x W x D)
Nett Weight	17.5 kg
Packaged Weight	18 kg

Packaging Details

Box Qty	1
Label Size (mm)	100 x 50
Label Colour	White
Label Qty	2.0000

Product Details

Country of Origin	China
Product Material	Vitreous China
Colour/Finish	White
Style	Contemporary
Fixings Included	No
Bottle Trap Included	No
Ce Certified	Yes
Inner Bowl Depth	270 mm
Inner Bowl Height	125 mm
Inner Bowl Width	600 mm
No. Of Tapholes	1
Number Of Bowls	1
Overflow Cover Included	No
Overflow Included	Yes
Tap Included	No
Waste Included	No

© ROXOR Group