Sales Code: CLS126BR1

Barcode: 5064007010023

Brand: Old London

Description: Old London Ashwick Satin White 800mm Floorstanding 2-Door Unit With Marble Top 1 Tap Hole



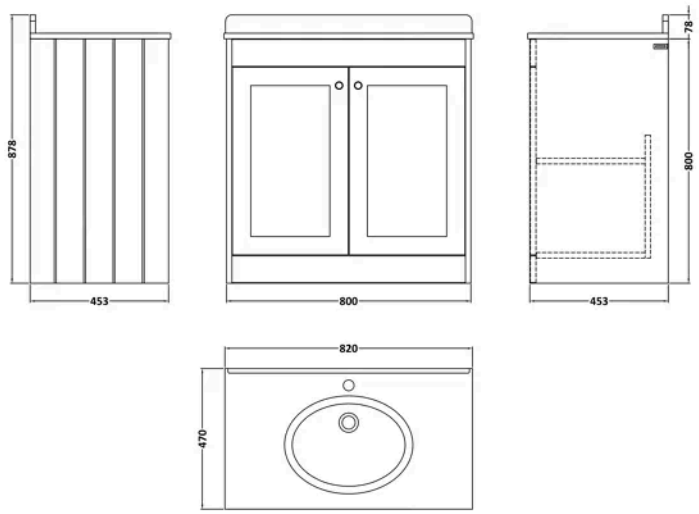

Product Dimensions

Product	814 x 820 x 463mm (H x W x D)
Packaged	550 x 550 x 550mm (H x W x D)
Nett Weight	48 kg
Packaged Weight	48.5 kg

Packaging Details

Box Qty	2

Product Details

Country of Origin	China
Product Material	Mfc Painted Matt
Colour/Finish	Satin White
Mount Type	Floor
Style	Traditional
Handle Type	Knob
Construction Method	Cam & Wood Dowel
Construction Type	Rigid
Fascia Finish	Mfc Painted Matt
Handles Included	Yes
Inner Bowl Depth	272 mm
Inner Bowl Height	160 mm
Inner Bowl Width	358 mm
Leg Set Included	No
Material Thickness	16 mm
No. Doors	2
No. Of Tapholes	1
No. Shelves	1
Number Of Bowls	1
Number Of Shelves	1
Overflow Cover Included	Yes
Overflow Included	Yes
Tap Included	No
Waste Included	No

© ROXOR Group

Sales Code: CLS126 **Barcode:** 5056817730161 **Brand:** Old London **Description:** Old London Ashwick 800mm Satin White 2 Door Floor Standing Vanity



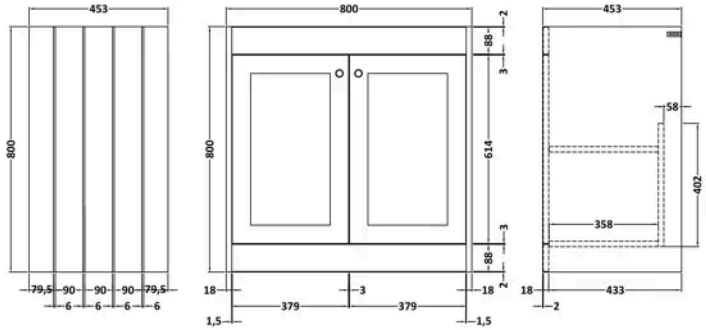

Product Dimensions

Product	800 x 800 x 453mm (H x W x D)
Packaged	835 x 825 x 480mm (H x W x D)
Nett Weight	30.5 kg
Packaged Weight	31 kg

Packaging Details

Box Qty	1

Product Details

Country of Origin	China
Product Material	Mfc Painted Matt
Colour/Finish	Satin White
Mount Type	Floor
Style	Traditional
Handle Type	Knob
Construction Method	Cam & Wood Dowel
Construction Type	Rigid
Fascia Finish	Mdf Painted Matt
Handles Included	Yes
Material Thickness	16 mm
No. Doors	2
No. Shelves	1
Number Of Shelves	1

© ROXOR Group

Sales Code: LOM227 **Barcode:** 5056211819028 **Brand:** Old London **Description:** Old London 1 Tap Hole 800mm Black Single Bowl Marble Top Basin



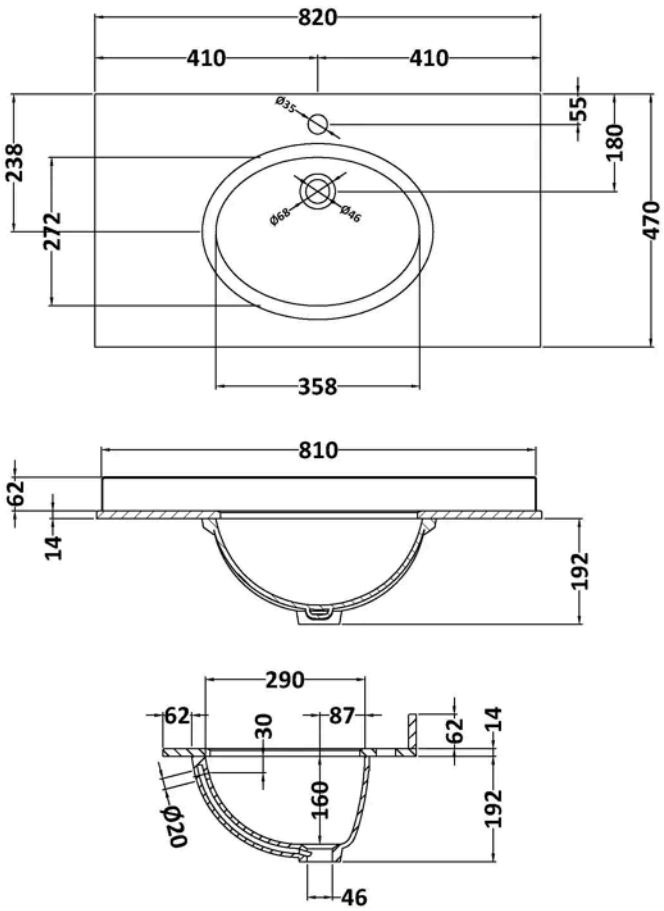

Product Dimensions

Product	268 x 820 x 463mm (H x W x D)
Packaged	310 x 900 x 550mm (H x W x D)
Nett Weight	18 kg
Packaged Weight	18.5 kg

Packaging Details

Box Qty	1

Product Details

Country of Origin	China
Product Material	Vitreous China
Colour/Finish	Black
Inner Bowl Height	160 mm
No. Of Tapholes	1
Number Of Bowls	1

© ROXOR Group