Sales Code: CLA223 **Barcode:** 5056462643113 **Brand:** nuie **Description:** nuie Classique 500mm Satin Grey 2 Door Floor Standing Vanity Unit



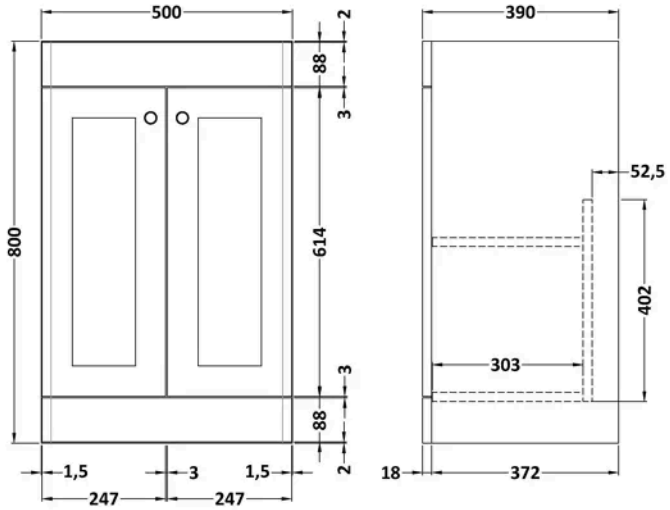

Product Dimensions

Product	800 x 500 x 390mm (H x W x D)
Packaged	835 x 525 x 415mm (H x W x D)
Nett Weight	21 kg
Packaged Weight	21.5 kg

Packaging Details

Box Qty	1

Product Details

Country of Origin	China
Product Material	Mdf Painted Matt
Colour/Finish	Satin Grey
Mount Type	Floor
Style	Traditional
Handle Type	Knob
Fixings Included	Yes
Construction Method	Cam & Wood Dowel
Construction Type	Rigid
Fascia Finish	Mfc Painted Matt
Handles Included	Yes
Material Thickness	16 mm
No. Doors	2
No. Shelves	1
Number Of Shelves	1

© ROXOR Group