Sales Code: CHE381CO **Barcode:** 5056678471982 **Brand:** BC Designs **Description:** Chlemsford Wall Mounted 2 Tap Hole Basin Mixer

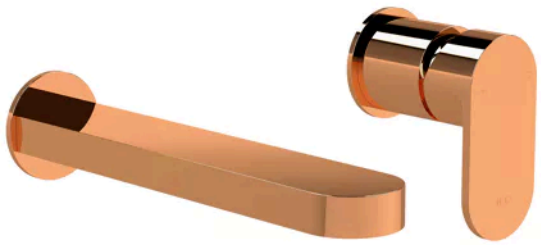

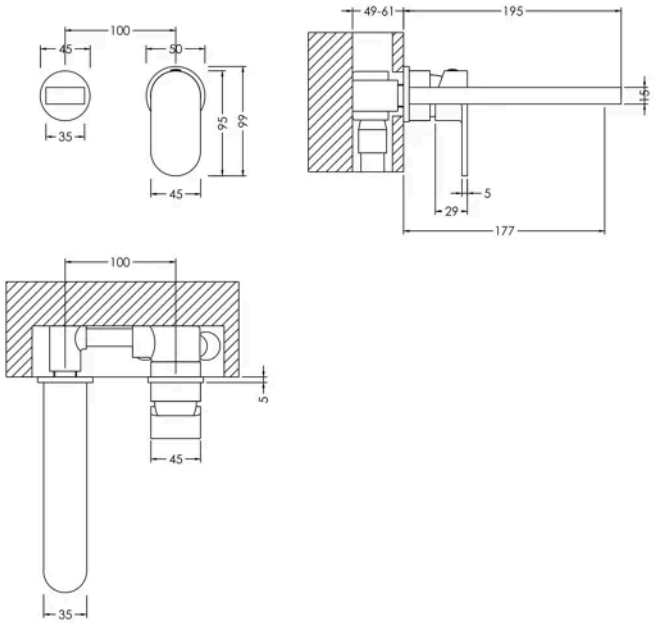

Product Dimensions

Product	53 x 150 x 195mm (H x W x D)
Packaged	115 x 205 x 250mm (H x W x D)
Outer Box	600 x 435 x 265mm (H x W x D)
Nett Weight	1.57 kg
Packaged Weight	1.67 kg

Packaging Details

Label Size (mm)	50 x 100
Label Colour	White
Label Qty	1.0000

Product Details

Country of Origin	United Kingdom
Product Material	Brass,Plastic
Control Type	Manual
WRAS Approved	No
Valve/Cartridge Type	Single Lever Cartridge
Colour/Finish	Copper
Mount Type	Wall Hung
Style	Contemporary
Handle Type	Lever/Round
TMV2 Approved	No
TMV3 Approved	No
Pipe Size	1/2"
Pipe Centres	100
Min Operating Pressure	0.2 Bar
Tap Spout Projection	177 mm
Tap Tails Included	Yes
Valve / Cartridge Type	Single Lever Cartridge
Waste Included	No

© ROXOR Group