**Sales Code:** CHE375N **Barcode:** 5056678473238 **Brand:** BC Designs **Description:** BC Designs Nickel Dual Thermostatic Bar Shower Valve With Kit



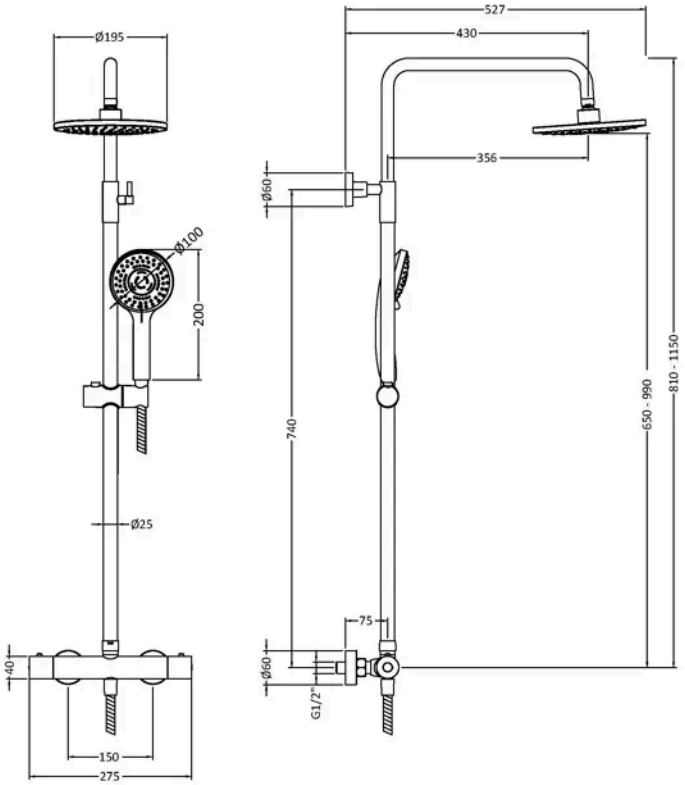


## Product Dimensions

| | |
|---|---|
| Product | 1245 x 267 x 429mm (H x W x D) |
| Packaged | 85 x 410 x 880mm (H x W x D) |
| Outer Box | 570 x 780 x 450mm (H x W x D) |
| Nett Weight | 3.88 kg |
| Packaged Weight | 3.98 kg |

## Packaging Details

| | |
|---|---|
| Label Size (mm) | 50 x 100 |
| Label Colour | White |
| Label Qty | 2.0000 |

## Product Details

| | |
|---|---|
| Country of Origin | United Kingdom |
| Product Material | Brass Abs |
| Control Type | Manual |
| WRAS Approved | Yes |
| Valve/Cartridge Type | 1/4 Turn |
| Colour/Finish | Nickel |
| Mount Type | Surface/Wall |
| Style | Contemporary |
| Handle Type | Round |
| Easy Clean | Yes |
| TMV2 Approved | No |
| TMV3 Approved | No |
| Pipe Size | 15 mm (1/2" BSP) |
| Pipe Centres | 150 |
| Handset Included | Yes |
| Head Included | Yes |
| Hose Included | Yes |
| Hose Length | 1500 mm |
| Min Operating Pressure | 1 Bar |
| No. Outlets | 2.0000 |
| Outlet Elbow Supplied | No |
| Valve / Cartridge Type | 1/4 Turn |
| Wras Approval No | 2307019 |

© ROXOR Group