Sales Code: CHE375BG **Barcode:** 5056678473269 **Brand:** BC Designs **Description:** BC Designs Brushed Gold Thermostatic Bar Shower Valve With Kit



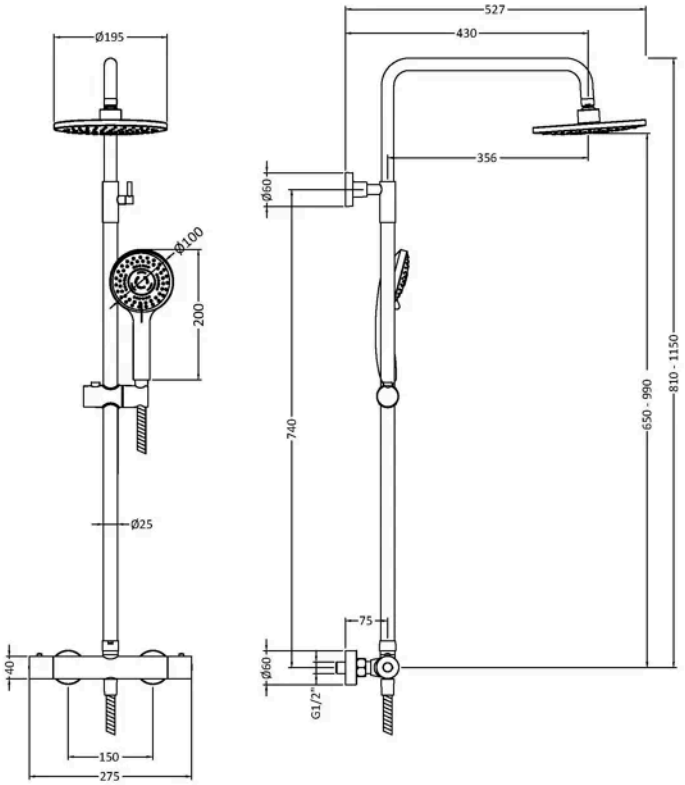

Product Dimensions

Product	1245 x 267 x 429mm (H x W x D)
Packaged	85 x 410 x 880mm (H x W x D)
Outer Box	570 x 780 x 450mm (H x W x D)
Nett Weight	3.88 kg
Packaged Weight	3.98 kg

Packaging Details

Label Size (mm)	50 x 100
Label Colour	White
Label Qty	2.0000

Product Details

Country of Origin	United Kingdom
Product Material	Brass Abs
Control Type	Manual
WRAS Approved	Yes
Valve/Cartridge Type	1/4 Turn
Colour/Finish	Brushed Gold
Mount Type	Surface/Wall
Style	Contemporary
Handle Type	Round
Easy Clean	Yes
TMV2 Approved	No
TMV3 Approved	No
Pipe Size	15 mm (1/2" BSP)
Pipe Centres	150
Handset Included	Yes
Head Included	Yes
Hose Included	Yes
Hose Length	1500 mm
Min Operating Pressure	1 Bar
No. Outlets	2.0000
Outlet Elbow Supplied	No
Valve / Cartridge Type	1/4 Turn
Wras Approval No	2307019

© ROXOR Group