Sales Code: CHE350N

Barcode: 5056678472248

Brand: BC Designs

Description: BC Sanitan BC Designs Chelmsford Nickel 3 Tap Hole Wall Mounted Basin Mixer With Plate

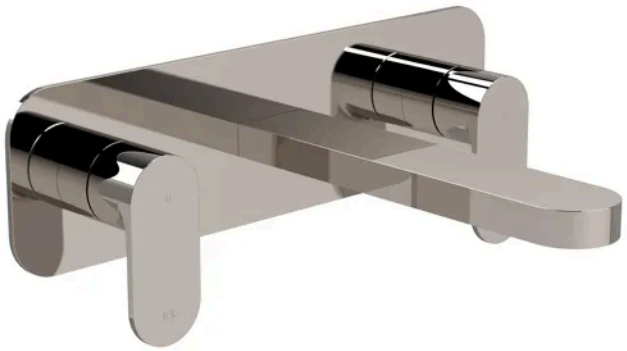

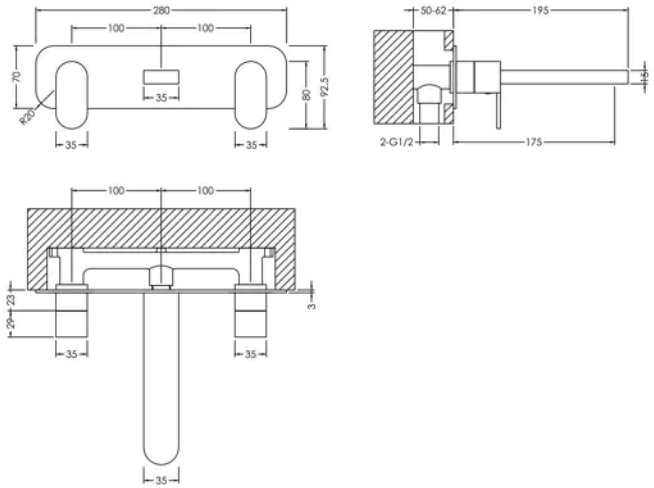

Product Dimensions

Product	75 x 280 x 193mm (H x W x D)
Packaged	115 x 185 x 325mm (H x W x D)
Outer Box	600 x 390 x 340mm (H x W x D)
Nett Weight	2.13 kg
Packaged Weight	2.23 kg

Packaging Details

Label Size (mm)	50 x 100
Label Colour	White
Label Qty	1.0000

Product Details

Country of Origin	United Kingdom
Product Material	Brass
Control Type	Manual
WRAS Approved	No
Valve/Cartridge Type	1/4 Turn Ceramic Disc
Colour/Finish	Nickel
Mount Type	Wall Hung
Style	Contemporary
Handle Type	Lever/Round
TMV2 Approved	No
TMV3 Approved	No
Pipe Size	1/2"
Pipe Centres	100
Min Operating Pressure	0.2 Bar
Tap Spout Projection	175 mm
Tap Tails Included	Yes
Valve / Cartridge Type	1/4 Turn Ceramic Disc
Waste Included	No

© ROXOR Group