**Sales Code:** CHE350BN

**Barcode:** 5056678472255

**Brand:** BC Designs

**Description:** BC Sanitan BC Designs Chelmsford Brushed Nickel 3 Tap Hole Wall Mounted Basin Mixer With Plate

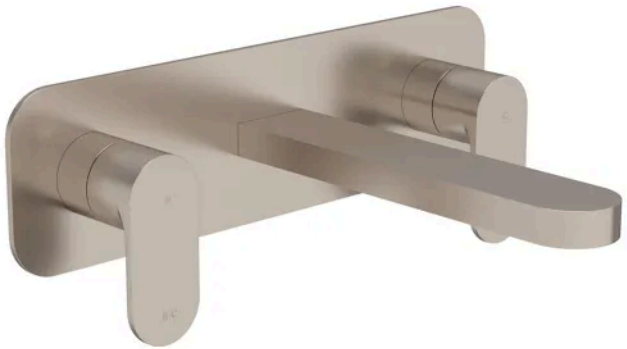

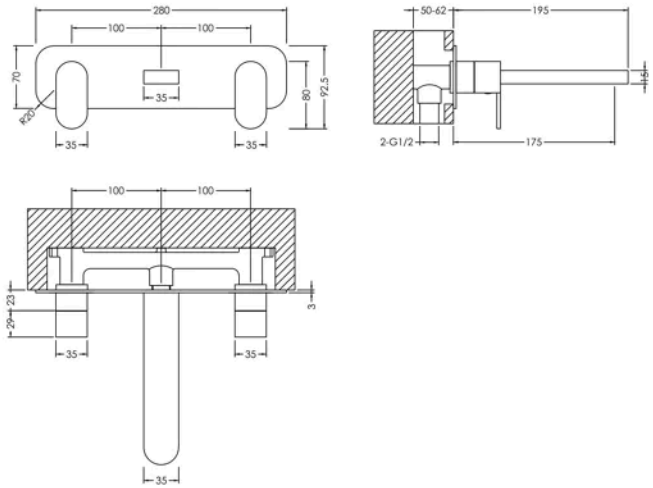


## Product Dimensions

| | |
|---|---|
| Product | 75 x 280 x 193mm (H x W x D) |
| Packaged | 115 x 185 x 325mm (H x W x D) |
| Outer Box | 600 x 390 x 340mm (H x W x D) |
| Nett Weight | 2.13 kg |
| Packaged Weight | 2.23 kg |

## Packaging Details

| | |
|---|---|
| Label Size (mm) | 50 x 100 |
| Label Colour | White |
| Label Qty | 1.0000 |

## Product Details

| | |
|---|---|
| Country of Origin | United Kingdom |
| Product Material | Brass |
| Control Type | Manual |
| WRAS Approved | No |
| Valve/Cartridge Type | 1/4 Turn Ceramic Disc |
| Colour/Finish | Brushed Nickel |
| Mount Type | Wall Hung |
| Style | Contemporary |
| Handle Type | Lever/Round |
| TMV2 Approved | No |
| TMV3 Approved | No |
| Pipe Size | 1/2" |
| Pipe Centres | 100 |
| Min Operating Pressure | 0.2 Bar |
| Tap Spout Projection | 175 mm |
| Tap Tails Included | Yes |
| Valve / Cartridge Type | 1/4 Turn Ceramic Disc |
| Waste Included | No |

© ROXOR Group