**Sales Code:** CHE321BC

**Barcode:** 5056678472613

**Brand:** BC Designs

**Description:** BC Sanitan BC Designs Chelmsford Brushed Chrome Freestanding Bath Shower Mixer

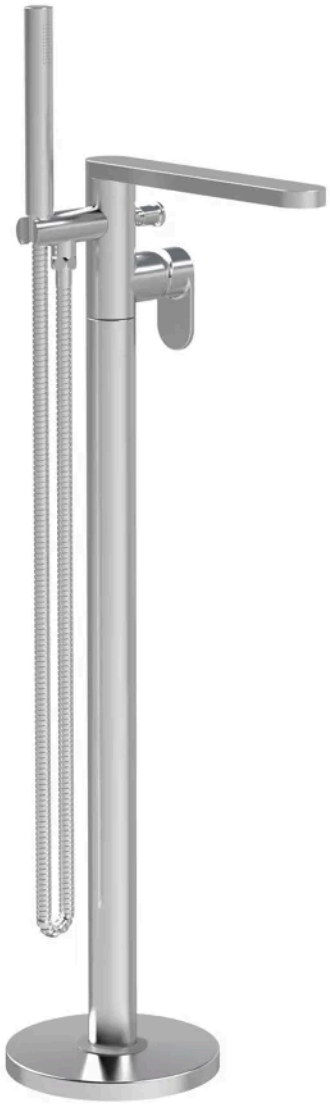

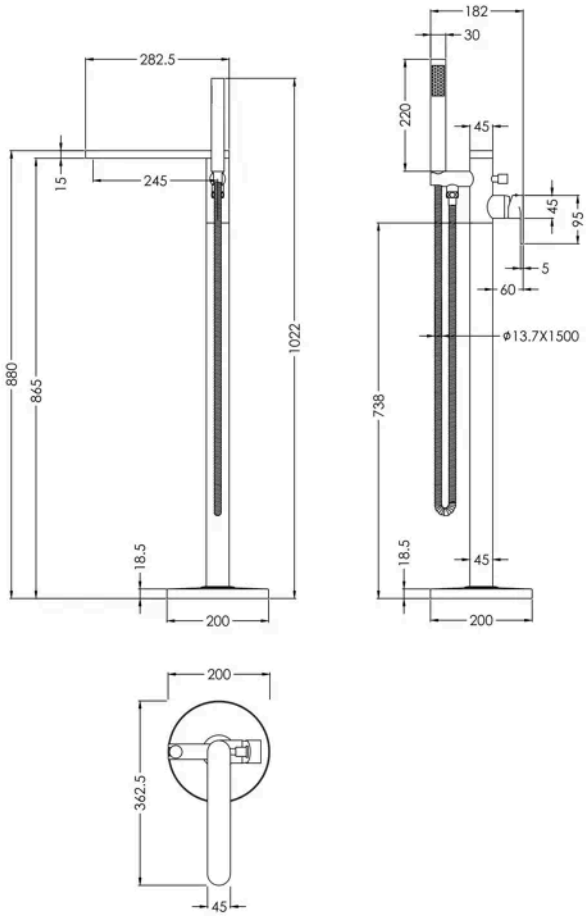


## Product Dimensions

| | |
|---|---|
| Product | 880 x 200 x 360mm (H x W x D) |
| Packaged | 250 x 400 x 980mm (H x W x D) |
| Outer Box | 250 x 400 x 980mm (H x W x D) |
| Nett Weight | 6.07 kg |
| Packaged Weight | 6.17 kg |

## Packaging Details

| | |
|---|---|
| Label Size (mm) | 50 x 100 |
| Label Colour | White |
| Label Qty | 1.0000 |

## Product Details

| | |
|---|---|
| Country of Origin | United Kingdom |
| Product Material | Brass,Plastic |
| Control Type | Manual |
| WRAS Approved | Yes |
| Valve/Cartridge Type | Single Lever Cartridge |
| Colour/Finish | Brushed Chrome |
| Mount Type | Floor |
| Style | Contemporary |
| Handle Type | Lever/Round |
| TMV2 Approved | No |
| TMV3 Approved | No |
| Pipe Size | 1/2" |
| Handset Included | Yes |
| Hose Included | Yes |
| Hose Length | 1500 mm |
| Min Operating Pressure | 3 Bar |
| Tap Spout Height | 865 mm |
| Tap Spout Projection | 245 mm |
| Tap Tails Included | Yes |
| Valve / Cartridge Type | Single Lever Cartridge |
| Waste Included | No |
| Wras Approval No | 250702036 |

© ROXOR Group