Sales Code: CHE317 **Barcode:** 5056678472125 **Brand:** BC Designs **Description:** BC Sanitan Chelmsford Chrome BC Designs 3 Tap Hole Wall Mounted Basin Mixer

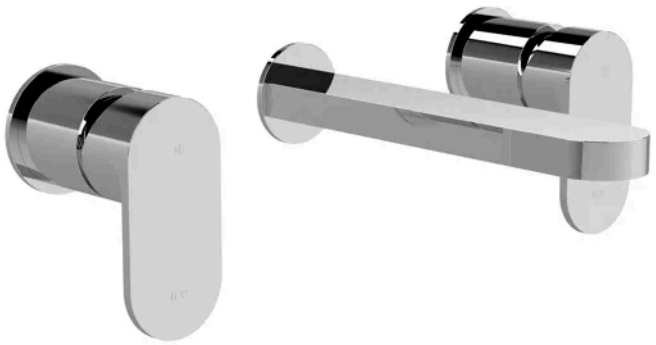

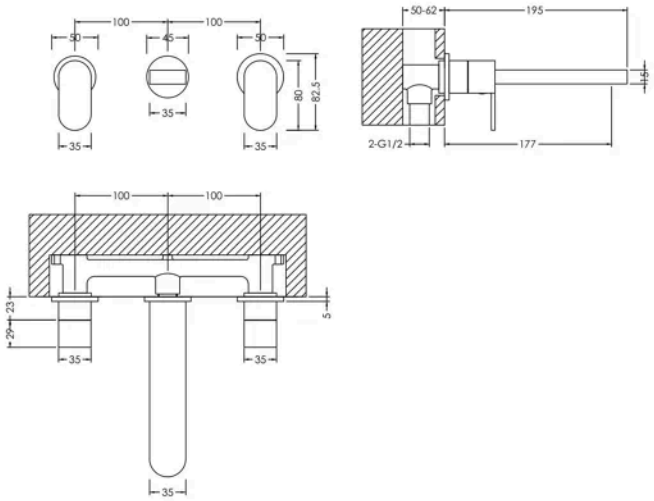

Product Dimensions

Product	75 x 245 x 195mm (H x W x D)
Packaged	115 x 185 x 325mm (H x W x D)
Outer Box	600 x 390 x 340mm (H x W x D)
Nett Weight	1.81 kg
Packaged Weight	1.91 kg

Packaging Details

Label Size (mm)	64 x 100
Label Colour	White
Label Qty	1.0000

Product Details

Country of Origin	China
Product Material	Brass
WRAS Approved	No
Valve/Cartridge Type	1/4 Turn Ceramic Disc
Colour/Finish	Chrome
Mount Type	Wall Hung
Style	Contemporary
Handle Type	Lever/Round
TMV2 Approved	No
TMV3 Approved	No
Pipe Size	1/2"
Pipe Centres	100MM
Handset Included	No
Hose Included	No
Min Operating Pressure	0.2 Bar
Tap Spout Projection	177 mm
Tap Tails Included	Yes
Valve / Cartridge Type	1/4 Turn Ceramic Disc
Waste Included	No

© ROXOR Group