**Sales Code:** CHE315G **Barcode:** 5056678471623 **Brand:** BC Designs **Description:** BC Sanitan BC Designs Chelmsford Gold Mono Mini Basin Mixer



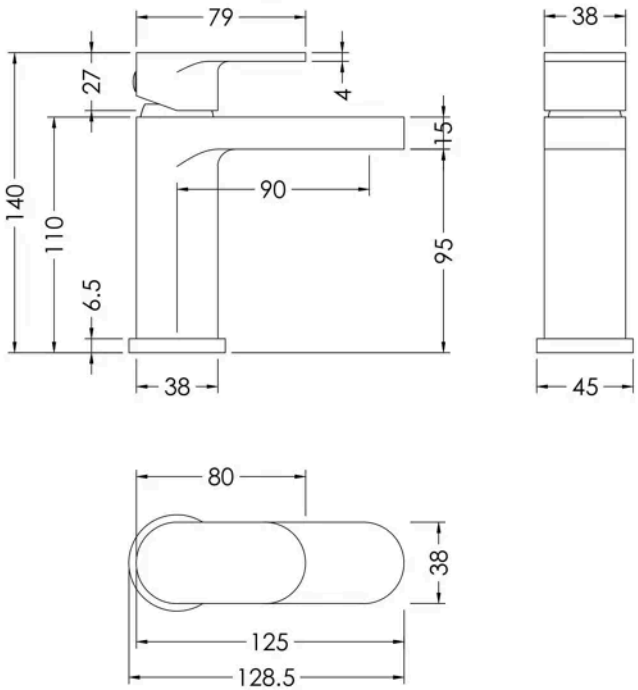


## Product Dimensions

| | |
|---|---|
| Product | 140 x 45 x 125mm (H x W x D) |
| Packaged | 95 x 225 x 275mm (H x W x D) |
| Outer Box | 500 x 480 x 295mm (H x W x D) |
| Nett Weight | 1.27 kg |
| Packaged Weight | 1.37 kg |

## Packaging Details

| | |
|---|---|
| Label Size (mm) | 50 x 100 |
| Label Colour | White |
| Label Qty | 1.0000 |

## Product Details

| | |
|---|---|
| Country of Origin | United Kingdom |
| Product Material | Brass,Plastic |
| Control Type | Manual |
| Waste Type | Push Button |
| WRAS Approved | No |
| Valve/Cartridge Type | Single Lever Cartridge |
| Colour/Finish | Gold |
| Mount Type | Deck |
| Style | Contemporary |
| Handle Type | Lever/Round |
| TMV2 Approved | No |
| TMV3 Approved | No |
| Pipe Size | 1/2" |
| Min Operating Pressure | 0.2 Bar |
| Tap Spout Height | 95 mm |
| Tap Spout Projection | 90 mm |
| Tap Tails Included | Yes |
| Valve / Cartridge Type | Single Lever Cartridge |
| Waste Included | No |

© ROXOR Group