Sales Code: CHE315BG **Barcode:** 5056678471630 **Brand:** BC Designs **Description:** BC Sanitan BC Designs Chelmsford Brushed Gold Mini Mono Basin Mixer



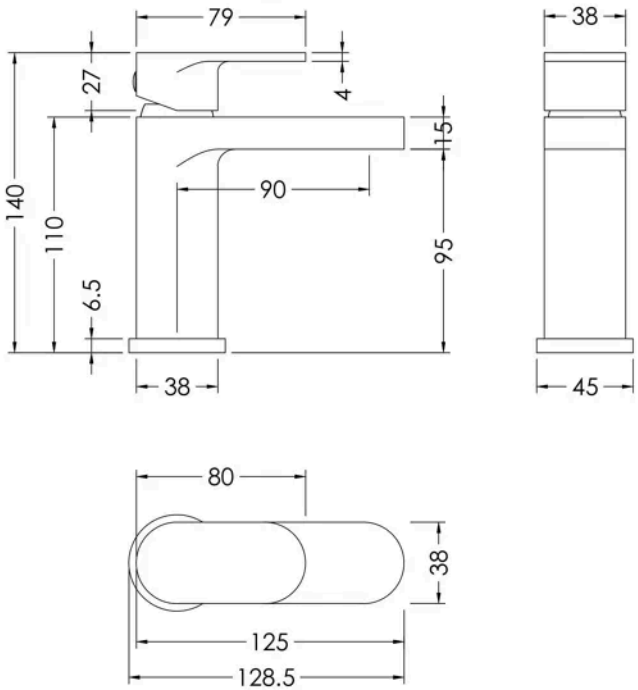

Product Dimensions

Product	140 x 45 x 125mm (H x W x D)
Packaged	95 x 225 x 275mm (H x W x D)
Outer Box	500 x 480 x 295mm (H x W x D)
Nett Weight	1.27 kg
Packaged Weight	1.37 kg

Packaging Details

Label Size (mm)	50 x 100
Label Colour	White
Label Qty	1.0000

Product Details

Country of Origin	United Kingdom
Product Material	Brass,Plastic
Control Type	Manual
Waste Type	Push Button
WRAS Approved	No
Valve/Cartridge Type	Single Lever Cartridge
Colour/Finish	Brushed Gold
Mount Type	Deck
Style	Contemporary
Handle Type	Lever/Round
TMV2 Approved	No
TMV3 Approved	No
Pipe Size	1/2"
Min Operating Pressure	0.2 Bar
Tap Spout Height	95 mm
Tap Spout Projection	90 mm
Tap Tails Included	Yes
Valve / Cartridge Type	Single Lever Cartridge
Waste Included	No

© ROXOR Group