Sales Code: CHE305BN

Barcode: 5056678471692

Brand: BC Designs

Description: BC Sanitan BC Designs Chelmsford Brushed Nickel Mono Basin Mixer With Push Button Waste



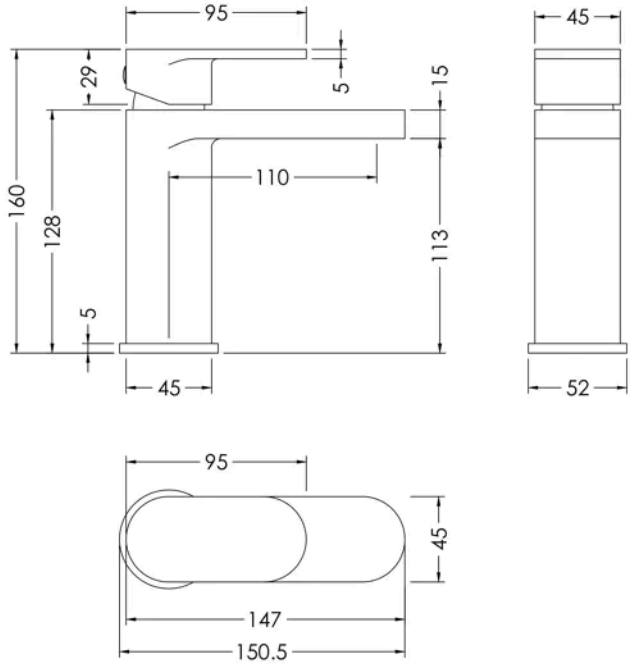

Product Dimensions

Product	160 x 52 x 147mm (H x W x D)
Packaged	95 x 225 x 275mm (H x W x D)
Outer Box	500 x 500 x 300mm (H x W x D)
Nett Weight	1.76 kg
Packaged Weight	1.86 kg

Packaging Details

Label Size (mm)	50 x 100
Label Colour	White
Label Qty	1.0000

Product Details

Country of Origin	United Kingdom
Product Material	Brass,Plastic
Control Type	Manual
Waste Type	Push Button
WRAS Approved	Yes
Valve/Cartridge Type	Single Lever Cartridge
Colour/Finish	Brushed Nickel
Mount Type	Deck
Style	Contemporary
Handle Type	Lever/Round
TMV2 Approved	No
TMV3 Approved	No
Pipe Size	1/2"
Min Operating Pressure	0.2 Bar
Tap Spout Height	113 mm
Tap Spout Projection	110 mm
Tap Tails Included	Yes
Valve / Cartridge Type	Single Lever Cartridge
Waste Included	Yes
Wras Approval No	250702009

© ROXOR Group