Sales Code: CEZME001 **Barcode:** 5056678431597 **Brand:** nuie **Description:** nuie 535mm Wall Hung Pan With Soft Close Seat



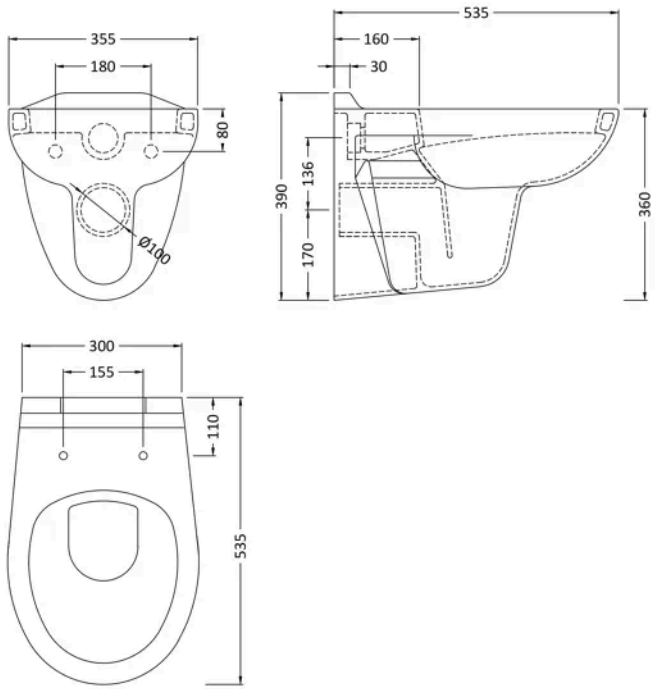

Product Dimensions

Product	390 x 355 x 535 x 429mm (H x W x D x L)
Packaged	360 x 365 x 520mm (H x W x D)
Nett Weight	15.2 kg
Packaged Weight	15.7 kg

Packaging Details

Box Qty	2

Product Details

Country of Origin	China
Product Material	Vitreous China
Colour/Finish	White
Style	Contemporary
Ce Certified	Yes
Includes Seat	Yes
Pan Type	Wall Hung

© ROXOR Group

Sales Code: NCS140 **Barcode:** 5056211804321 **Brand:** nuie **Description:** nuie Melbourne Rimless Wall Hung Pan



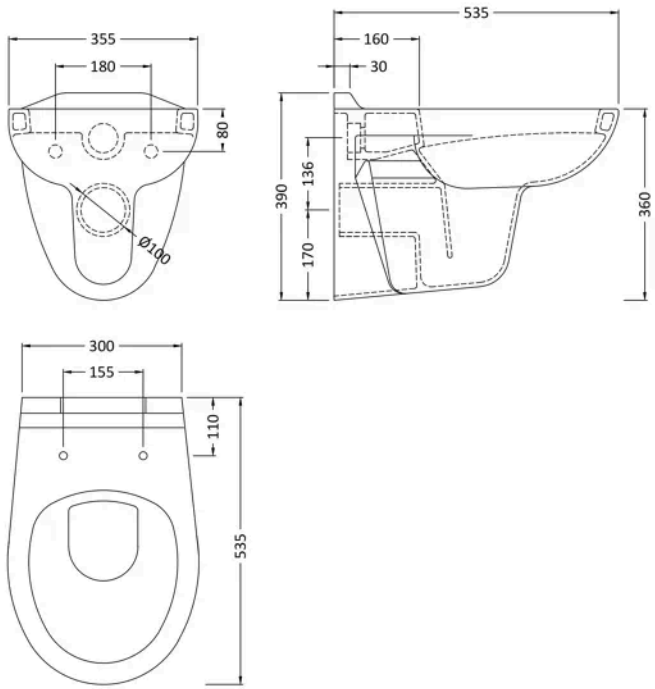

Product Dimensions

Product	360 x 355 x 515mm (H x W x D)
Packaged	400 x 370 x 550mm (H x W x D)
Nett Weight	14.5 kg
Packaged Weight	15 kg

Packaging Details

Box Qty	1

Product Details

Country of Origin	China
Product Material	Vitreous China
Colour/Finish	White
Style	Contemporary
Ce Certified	Yes
Includes Seat	No
Pan Type	Rimless,Wall Hung

© ROXOR Group

Sales Code: NTS010 **Barcode:** 5055369001446 **Brand:** nuie **Description:** nuie White Round Soft Close Toilet Seat With Bottom Fix Hinge



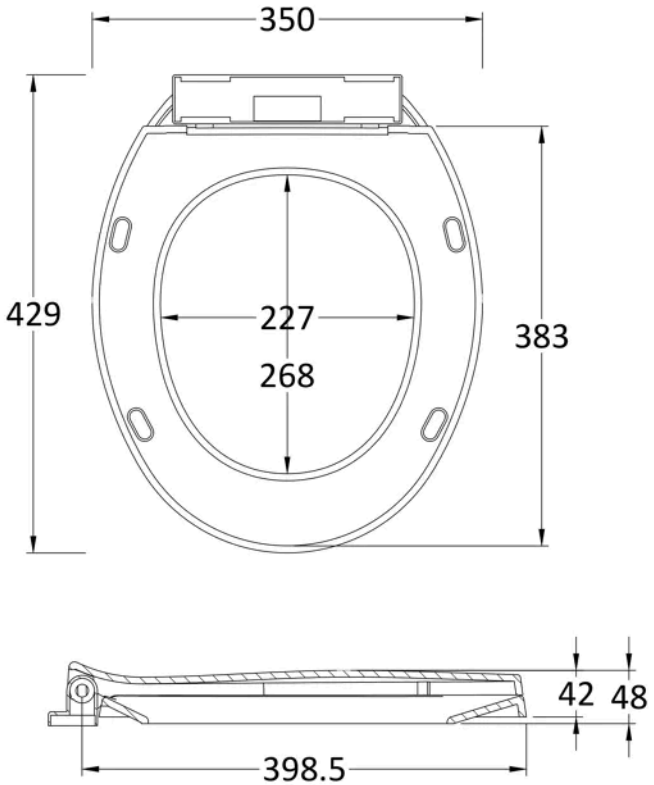

Product Dimensions

Product	50 x 350 x 420mm (H x W x D)
Packaged	70 x 350 x 440mm (H x W x D)
Outer Box	400mm (H)
Nett Weight	1.2 kg
Packaged Weight	1.42 kg

Packaging Details

Box Qty	1
Label Size (mm)	50 x 100

Product Details

Country of Origin	China
Product Material	Polypropylene
Colour/Finish	White
Style	Contemporary
Fixings Included	Yes
Ce Certified	No
Declaration Of Performance	No
Hinge Centres (Max)	180 mm
Hinge Centres (Min)	120 mm
Toilet Seat Function	Soft Close
Toilet Seat Hinge Type	Bottom Fix
Toilet Seat Type	Round

© ROXOR Group