Sales Code: CEZMA001 **Barcode:** 5056678431573 **Brand:** Hudson Reed **Description:** nuie 525mm Wall Hung Toilet With Soft Close Seat & Concealed Cistern



Technical Drawing Not Available

Product Dimensions

Product	400 x 355 x 525 x 400mm (H x W x D x L)
Packaged	410 x 370 x 550mm (H x W x D)
Nett Weight	37.58 kg
Packaged Weight	37.58 kg

Packaging Details

Box Qty	4

Product Details

Country of Origin	China
Product Material	Vitreous China
Colour/Finish	White
Style	Contemporary
Ce Certified	Yes
Includes Seat	Yes
Pan Type	Wall Hung

© ROXOR Group

Sales Code: NCT300C **Barcode:** 5055369063338 **Brand:** Hudson Reed **Description:** Hudson Reed Maya Wall Hung Pan



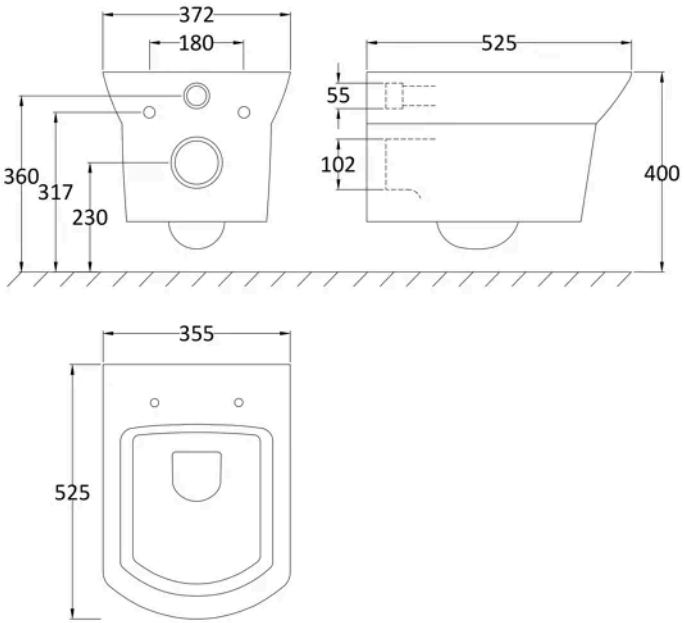

Product Dimensions

Packaged	410 x 370 x 550mm (H x W x D)
Nett Weight	23.7 kg
Packaged Weight	23.7 kg

Packaging Details

Box Qty	1

Product Details

Country of Origin	Turkey
Colour/Finish	White
Fixings Included	No
Ce Certified	Yes

© ROXOR Group

Sales Code: NCT699 **Barcode:** 5055369063345 **Brand:** Hudson Reed **Description:** Hudson Reed Maya White D-Shaped Soft Close Toilet Seat With Quick Release Hinge



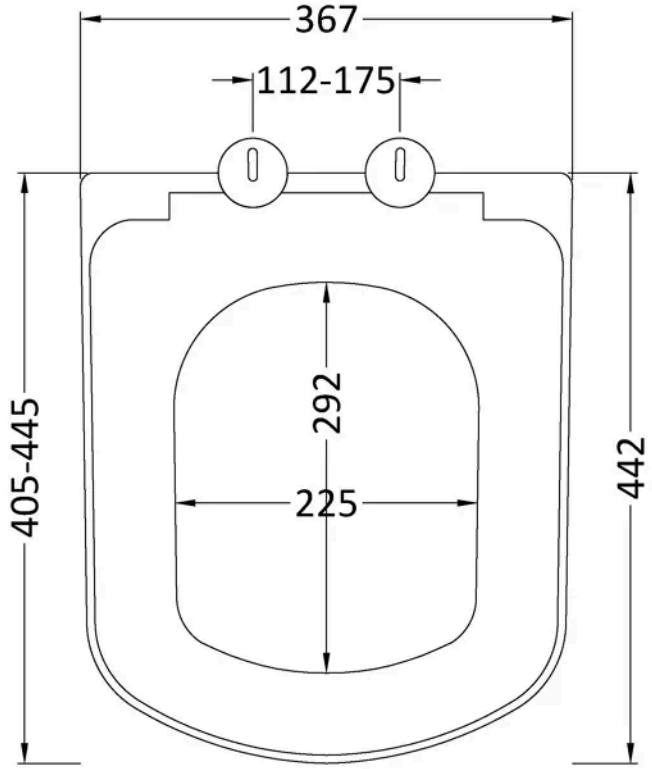

Product Dimensions

Product	50 x 355 x 442mm (H x W x D)
Packaged	600 x 380 x 475mm (H x W x D)
Outer Box	420mm (H)
Nett Weight	2.7 kg
Packaged Weight	2.7 kg

Packaging Details

Box Qty	1
Label Size (mm)	50 x 100
Label Colour	White

Product Details

Country of Origin	Turkey
Product Material	Polypropylene
Colour/Finish	White
Style	Contemporary
Fixings Included	Yes
Hinge Centres (Max)	170 mm
Hinge Centres (Min)	62 mm
Toilet Seat Function	Soft Close
Toilet Seat Hinge Type	Quick Release
Toilet Seat Type	D Shape

© ROXOR Group

Sales Code: XTY009 **Barcode:** 5056211854319 **Brand:** nuie **Description:** Dual Flush Concealed Cistern With Frame



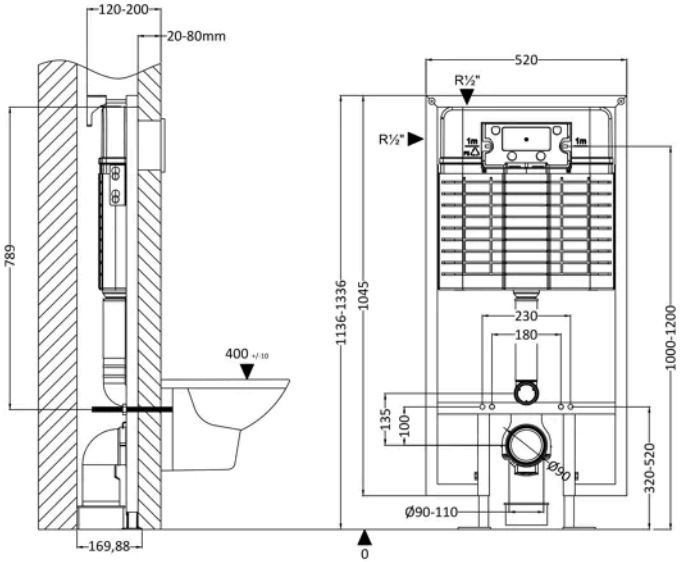

Product Dimensions

Product	1136 x 520 x 204mm (H x W x D)
Packaged	1125 x 560 x 160mm (H x W x D)
Nett Weight	11.17 kg
Packaged Weight	11.17 kg

Packaging Details

Box Qty	1

Product Details

Country of Origin	China
Product Material	Stainless Steel
Colour/Finish	Chrome
Style	Contemporary

© ROXOR Group

Sales Code: XTY009PR **Barcode:** 5056211855279 **Brand:** nuie **Description:** Round Chrome Dual Flush Push Button



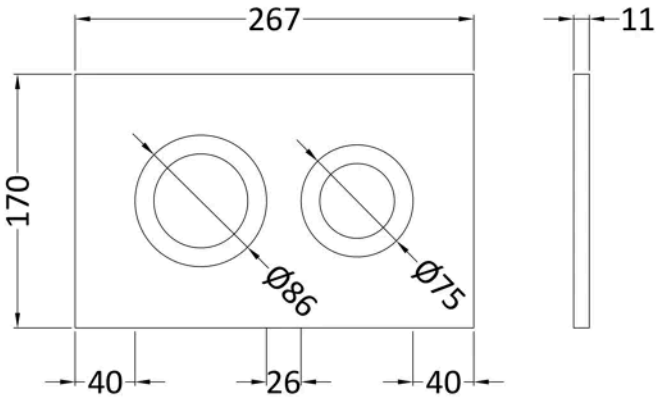

Product Dimensions

Product	170 x 267 x 11mm (H x W x D)
Packaged	175 x 300 x 11mm (H x W x D)
Nett Weight	0.01 kg
Packaged Weight	0.01 kg

Packaging Details

Box Qty	1

Product Details

Country of Origin	United Kingdom
Product Material	Abs
Colour/Finish	Chrome
Style	Contemporary

© ROXOR Group