Sales Code: CEZGR001 **Barcode:** 5056678431535 **Brand:** Hudson Reed **Description:** nuie Square Wall Hung Toilet With Soft Close Seat & Concealed Cistern



Technical Drawing Not Available

Product Dimensions

Product	355 x 350 x 475 x 355mm (H x W x D x L)
Packaged	530 x 430 x 420mm (H x W x D)
Nett Weight	31.67 kg
Packaged Weight	32.17 kg

Packaging Details

Box Qty	3

Product Details

Country of Origin	China
Product Material	Vitreous China
Colour/Finish	White
Style	Contemporary
Ce Certified	Yes
Includes Seat	Yes
Pan Type	Wall Hung

© ROXOR Group

Sales Code: NCT140 **Barcode:** 5055275885314 **Brand:** Hudson Reed **Description:** Hudson Reed Grace Rimless Wall Hung Pan



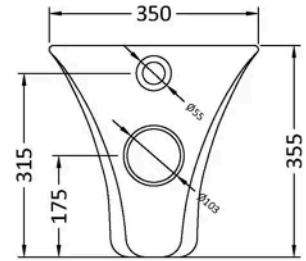

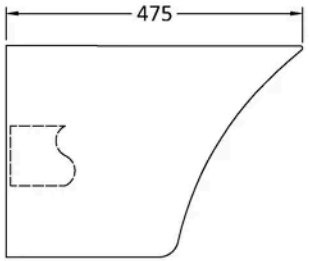

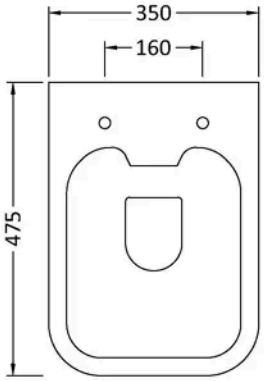

Product Dimensions

Product	355 x 350 x 490mm (H x W x D)
Packaged	490 x 365 x 430mm (H x W x D)
Nett Weight	20.5 kg
Packaged Weight	21.2 kg

Packaging Details

Box Qty	1

Product Details

Country of Origin	Turkey
Product Material	Vitreous China
Colour/Finish	White
Style	Contemporary
Ce Certified	Yes
Includes Seat	Yes
Pan Type	Wall Hung

© ROXOR Group

Sales Code: XTY009 **Barcode:** 5056211854319 **Brand:** nuie **Description:** Dual Flush Concealed Cistern With Frame



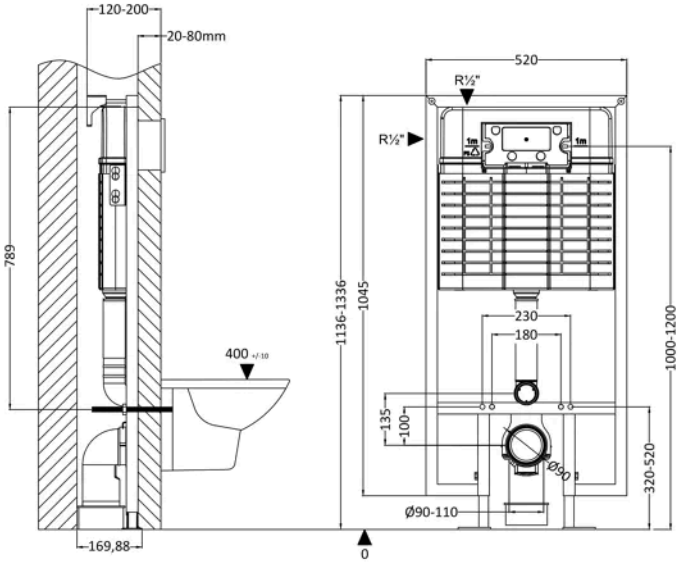

Product Dimensions

Product	1136 x 520 x 204mm (H x W x D)
Packaged	1125 x 560 x 160mm (H x W x D)
Nett Weight	11.17 kg
Packaged Weight	11.17 kg

Packaging Details

Box Qty	1

Product Details

Country of Origin	China
Product Material	Stainless Steel
Colour/Finish	Chrome
Style	Contemporary

© ROXOR Group

Sales Code: XTY009PS **Barcode:** 5056211855262 **Brand:** nuie **Description:** Square Chrome Dual Flush Push Button

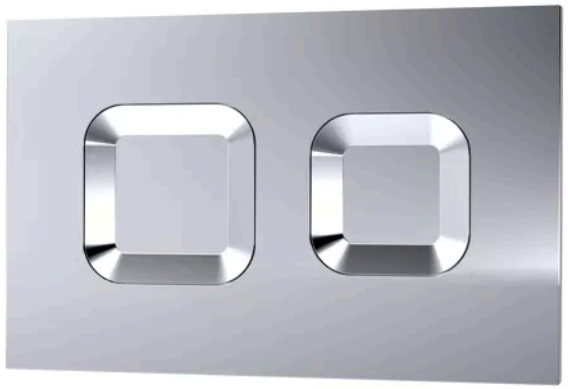

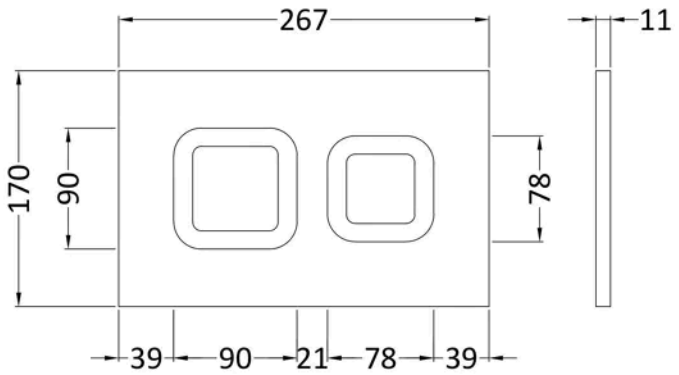

Product Dimensions

Product	170 x 267 x 11mm (H x W x D)
Packaged	50 x 220 x 290mm (H x W x D)
Nett Weight	0.5 kg
Packaged Weight	0.5 kg

Packaging Details

Box Qty	1

Product Details

Country of Origin	United Kingdom
Product Material	Abs
Colour/Finish	Chrome
Style	Contemporary

© ROXOR Group