Sales Code: CEZAR001 **Barcode:** 5056678431542 **Brand:** Hudson Reed **Description:** nuie Square Bowl Wall Hung Toilet With Soft Close Seat & Concealed Cistern



Technical Drawing Not Available

Product Dimensions

Product	360 x 350 x 525 x 360mm (H x W x D x L)
Packaged	400 x 360 x 550mm (H x W x D)
Nett Weight	34.17 kg
Packaged Weight	34.67 kg

Packaging Details

Box Qty	4

Product Details

Country of Origin	China
Product Material	Vitreous China
Colour/Finish	White
Style	Contemporary
Ce Certified	Yes
Includes Seat	Yes
Pan Type	Wall Hung

© ROXOR Group

Sales Code: NCU700C **Barcode:** 5055369031009 **Brand:** Hudson Reed **Description:** Hudson Reed Arlo Wall Hung Pan



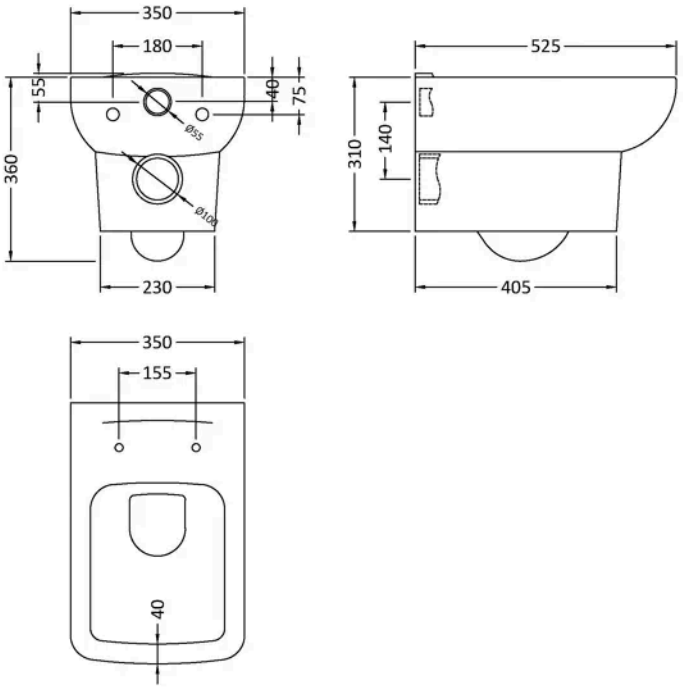

Product Dimensions

Packaged	420 x 370 x 530mm (H x W x D)
Nett Weight	20.5 kg
Packaged Weight	21 kg

Packaging Details

Box Qty	1

Product Details

Country of Origin	Turkey
Colour/Finish	White
Ce Certified	Yes

© ROXOR Group

Sales Code: NCU799 **Barcode:** 5055369030996 **Brand:** Hudson Reed **Description:** Hudson Reed Arlo White Square Soft Close Toilet Seat With Top Fix Hinge



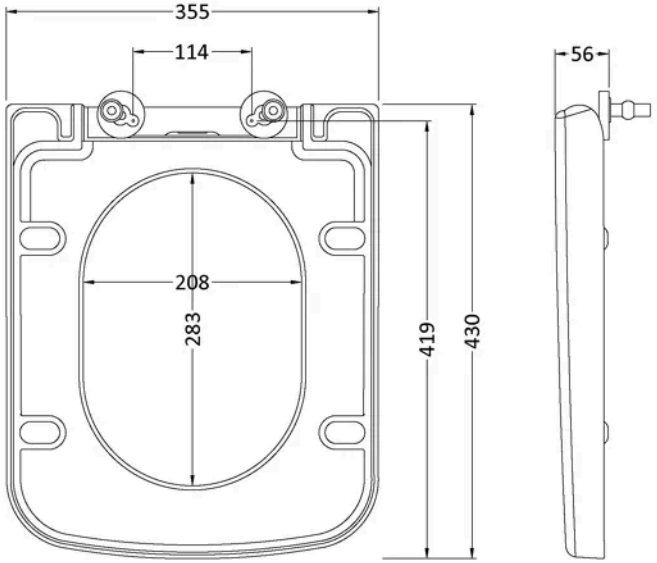

Product Dimensions

Product	56 x 355 x 430mm (H x W x D)
Packaged	50 x 500 x 365mm (H x W x D)
Outer Box	480mm (H)
Nett Weight	2.5 kg
Packaged Weight	2.75 kg

Packaging Details

Box Qty	1
Label Size (mm)	50 x 100
Label Qty	1.0000

Product Details

Country of Origin	Turkey
Product Material	Polypropylene
Colour/Finish	White
Style	Contemporary
Fixings Included	Yes
Hinge Centres (Max)	186 mm
Hinge Centres (Min)	150 mm
Toilet Seat Function	Soft Close
Toilet Seat Hinge Type	Top Fix
Toilet Seat Type	Square

© ROXOR Group

Sales Code: XTY009 **Barcode:** 5056211854319 **Brand:** nuie **Description:** Dual Flush Concealed Cistern With Frame



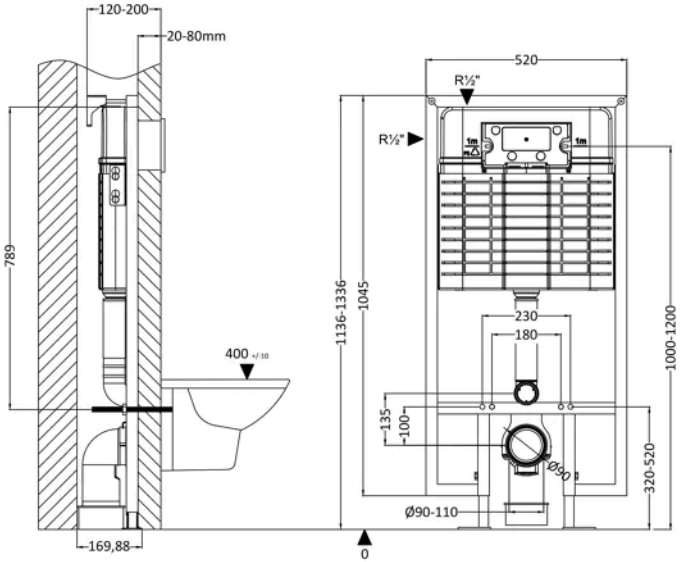

Product Dimensions

Product	1136 x 520 x 204mm (H x W x D)
Packaged	1125 x 560 x 160mm (H x W x D)
Nett Weight	11.17 kg
Packaged Weight	11.17 kg

Packaging Details

Box Qty	1

Product Details

Country of Origin	China
Product Material	Stainless Steel
Colour/Finish	Chrome
Style	Contemporary

© ROXOR Group

Sales Code: XTY009PS **Barcode:** 5056211855262 **Brand:** nuie **Description:** Square Chrome Dual Flush Push Button

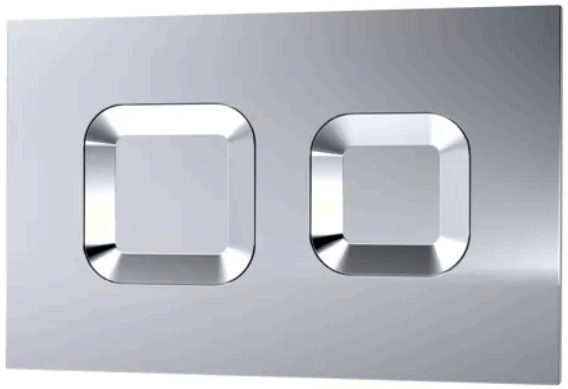

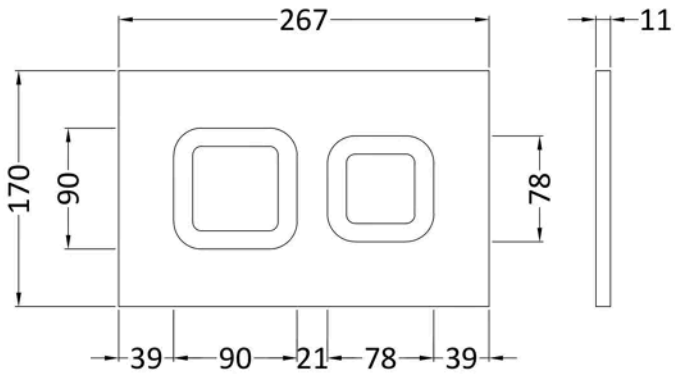

Product Dimensions

Product	170 x 267 x 11mm (H x W x D)
Packaged	50 x 220 x 290mm (H x W x D)
Nett Weight	0.5 kg
Packaged Weight	0.5 kg

Packaging Details

Box Qty	1

Product Details

Country of Origin	United Kingdom
Product Material	Abs
Colour/Finish	Chrome
Style	Contemporary

© ROXOR Group