Sales Code: CCR037 **Barcode:** 5056211884361 **Brand:** Old London **Description:** Old London Richmond Comfort Height Mid Level Toilet, Cistern & Flush Pipe



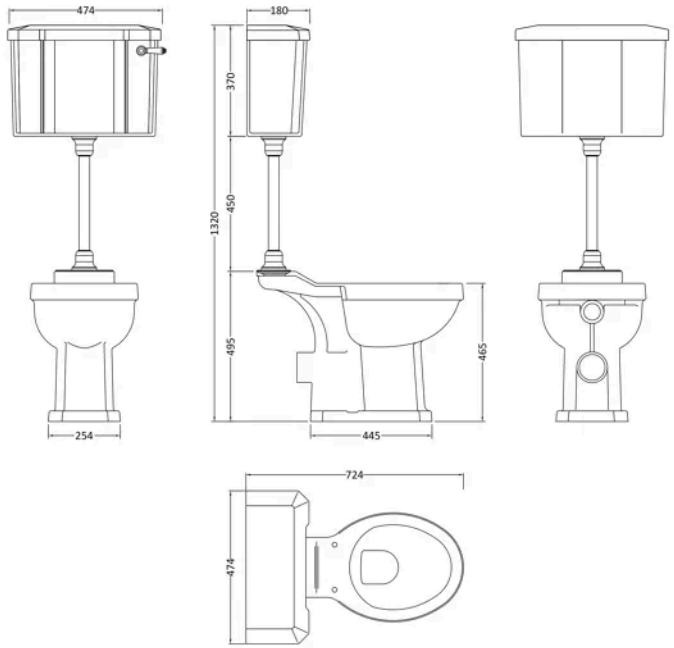

Product Dimensions

Product	1320 x 510 x 724mm (H x W x D)
Packaged	550 x 550 x 550mm (H x W x D)
Nett Weight	37.1 kg
Packaged Weight	37.6 kg

Product Details

Country of Origin	China
Product Material	Vitreous China
Colour/Finish	Gloss White
Style	Traditional
Ce Certified	Yes
Includes Seat	No
Pan Type	Comfort Height

© ROXOR Group

Sales Code: FA303 **Barcode:** 5056211883890 **Brand:** Old London **Description:** Mid Level Cover Plate

Product Image Not Available

Technical Drawing Not Available

Product Dimensions

Packaged	95 x 75 x 260mm (H x W x D)
Nett Weight	0.2 kg
Packaged Weight	0.24 kg

Packaging Details

Box Qty	1

Product Details

Country of Origin	China
Colour/Finish	Chrome

© ROXOR Group

Sales Code: FA304 **Barcode:** 5056211883906 **Brand:** Old London **Description:** Mid Level Straight Flush Pipe



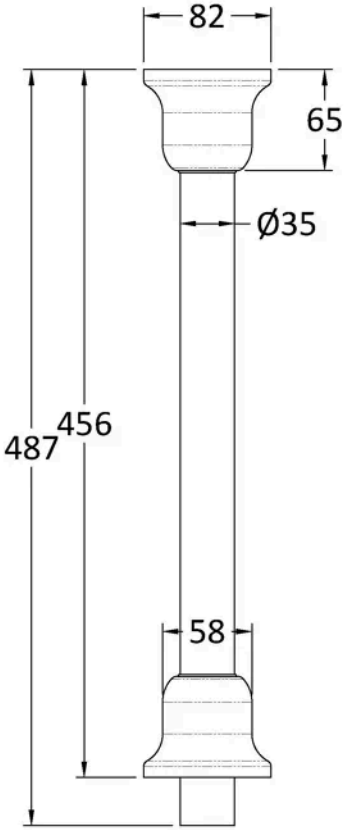

Product Dimensions

Packaged	515 x 115 x 100mm (H x W x D)
Nett Weight	0.4 kg
Packaged Weight	0.48 kg

Packaging Details

Box Qty	1

Product Details

Country of Origin	China
Product Material	Vitreous China
Colour/Finish	Chrome

© ROXOR Group

Sales Code: NCS850 **Barcode:** 5055275895566 **Brand:** Old London **Description:** Old London Richmond Traditional Comfort Height Pan



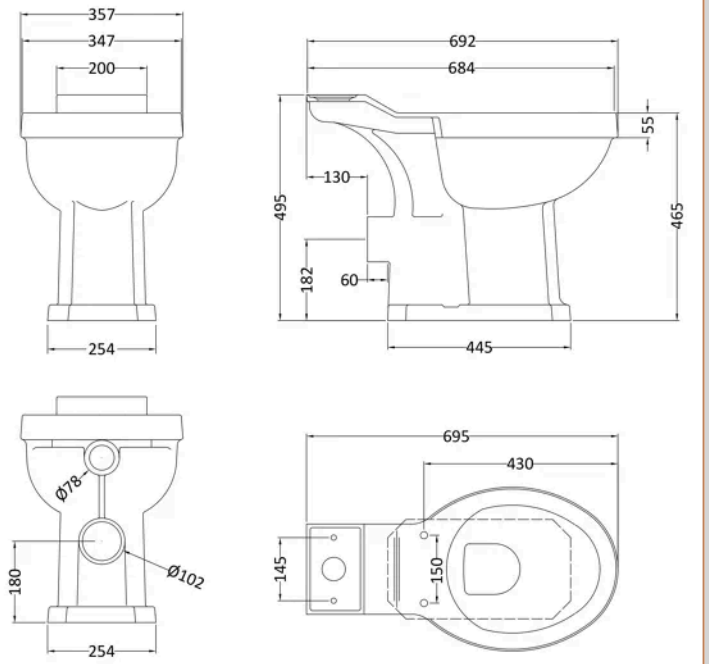

Product Dimensions

Packaged	380 x 720 x 505mm (H x W x D)
Nett Weight	22.5 kg
Packaged Weight	23.1 kg

Packaging Details

Box Qty	1

Product Details

Country of Origin	China
Colour/Finish	White
Ce Certified	Yes

© ROXOR Group

Sales Code: NCS871B **Barcode:** 5055369040155 **Brand:** Old London **Description:** Old London Richmond Low Level Cistern B Ceramic Lever Fittings



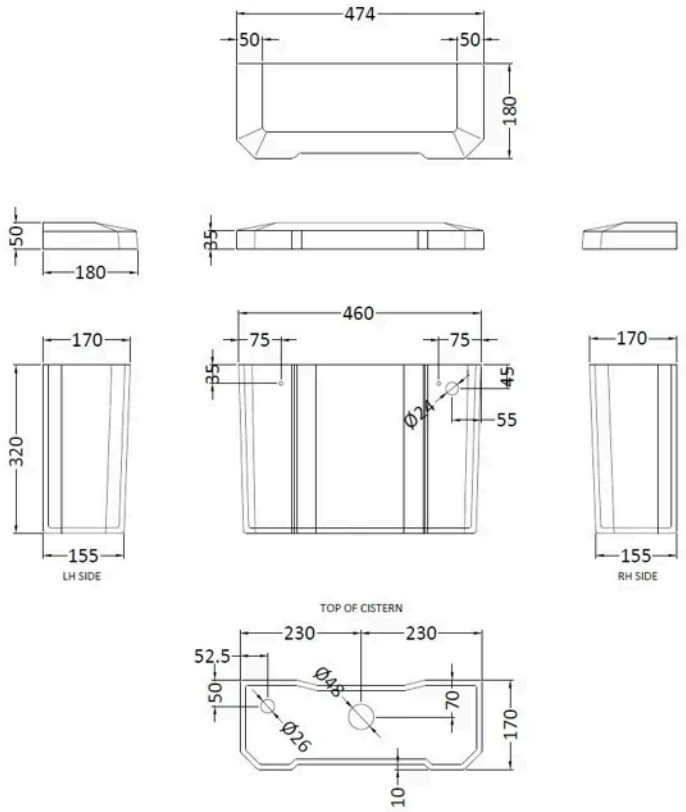

Product Dimensions

Packaged	205 x 485 x 397mm (H x W x D)
Nett Weight	14.5 kg
Packaged Weight	16.5 kg

Packaging Details

Box Qty	1

Product Details

Country of Origin	China
Colour/Finish	White
Ce Certified	Yes

© ROXOR Group