Sales Code: CCR036 **Barcode:** 5056211892359 **Brand:** Old London **Description:** Old London Richmond Mid Level Toilet, Cistern & Flush Pipe



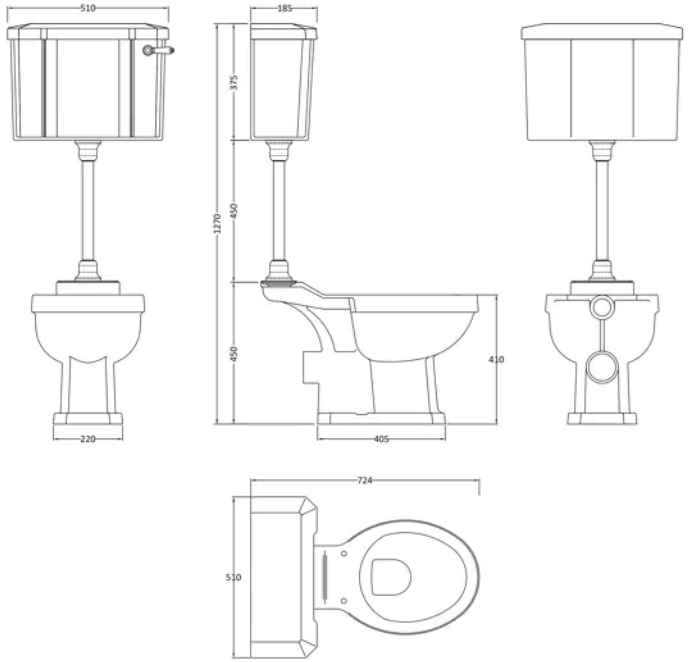

Product Dimensions

Product	1270 x 510 x 724mm (H x W x D)
Packaged	550 x 550 x 550mm (H x W x D)
Nett Weight	35.02 kg
Packaged Weight	35.52 kg

Product Details

Country of Origin	China
Product Material	Vitreous China
Colour/Finish	Gloss White
Style	Traditional
Ce Certified	Yes
Includes Seat	No
Pan Type	Open To Wall

© ROXOR Group

Sales Code: FA303 **Barcode:** 5056211883890 **Brand:** Old London **Description:** Mid Level Cover Plate

Product Image Not Available

Technical Drawing Not Available

Product Dimensions

Packaged	95 x 75 x 260mm (H x W x D)
Nett Weight	0.2 kg
Packaged Weight	0.24 kg

Product Details

Country of Origin	China

© ROXOR Group

Sales Code: FA304 **Barcode:** 5056211883906 **Brand:** Old London **Description:** Mid Level Straight Flush Pipe



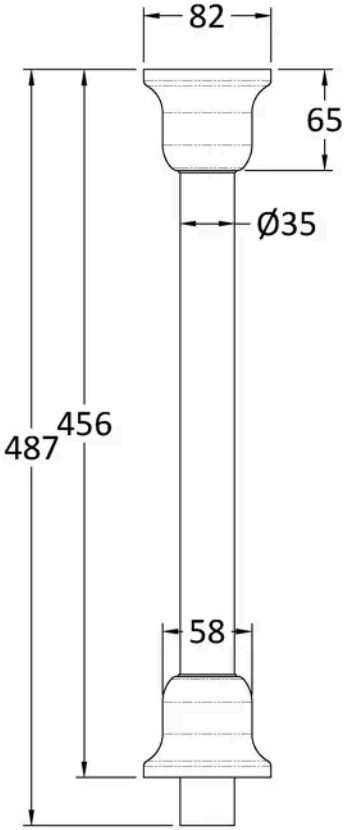

Product Dimensions

Packaged	515 x 115 x 100mm (H x W x D)
Nett Weight	0.4 kg
Packaged Weight	0.48 kg

Product Details

Country of Origin	China

© ROXOR Group

Sales Code: NCS871B **Barcode:** 5055369040155 **Brand:** Old London **Description:** Old London Richmond Low Level Cistern B Ceramic Lever Fittings



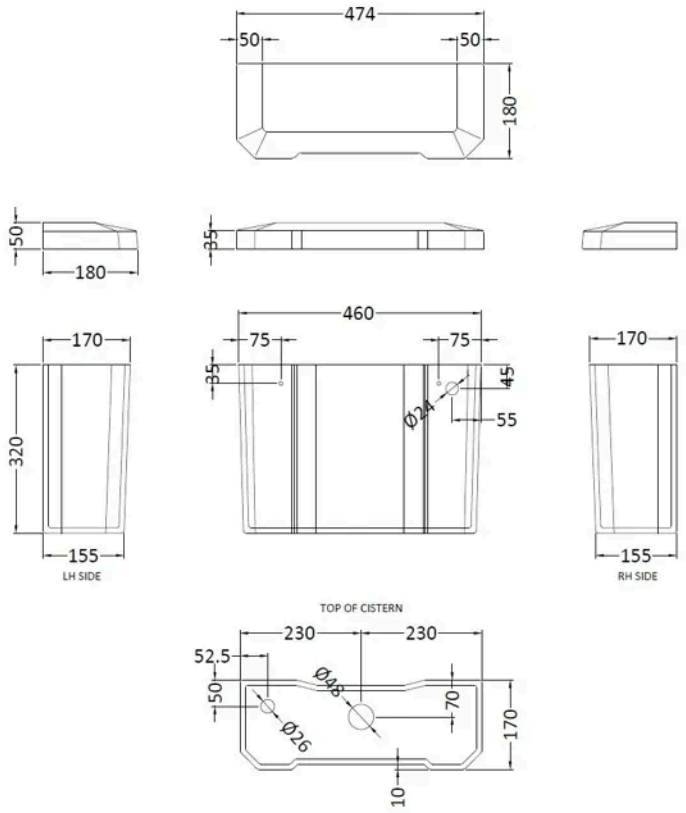

Product Dimensions

Packaged	205 x 485 x 397mm (H x W x D)
Nett Weight	14.5 kg
Packaged Weight	16.5 kg

Product Details

Country of Origin	China
Ce Certified	Yes

© ROXOR Group

Sales Code: NCS880 **Barcode:** 5055369040100 **Brand:** Old London **Description:** Old London Richmond Traditional Close Coupled Pan



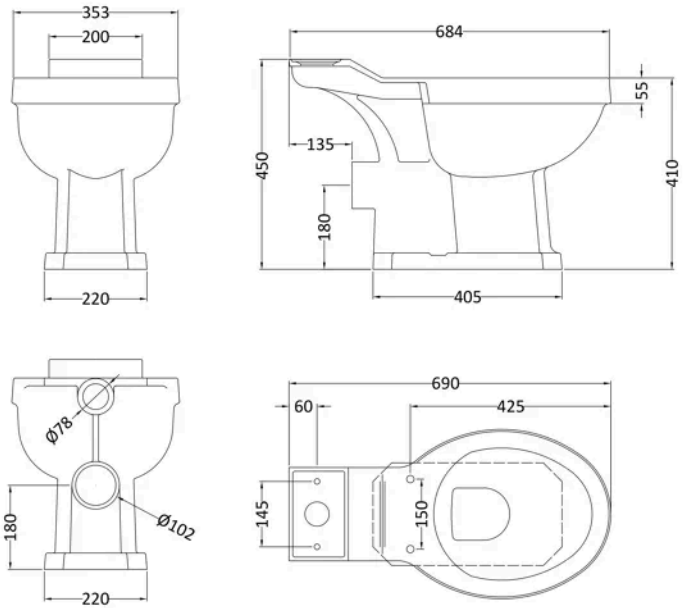

Product Dimensions

Product	450 x 353 x 690mm (H x W x D)
Packaged	335 x 700 x 450mm (H x W x D)
Nett Weight	20.42 kg
Packaged Weight	21.5 kg

Product Details

Country of Origin	China
Product Material	Vitreous China
Colour/Finish	White
Style	Traditional
Ce Certified	Yes
Includes Seat	No
Pan Type	Open To Wall

© ROXOR Group