Sales Code: CCR023 **Barcode:** 5055275895740 **Brand:** Old London **Description:** Old London Richmond Traditional High Level Toilet, Cistern & Flush Pipe



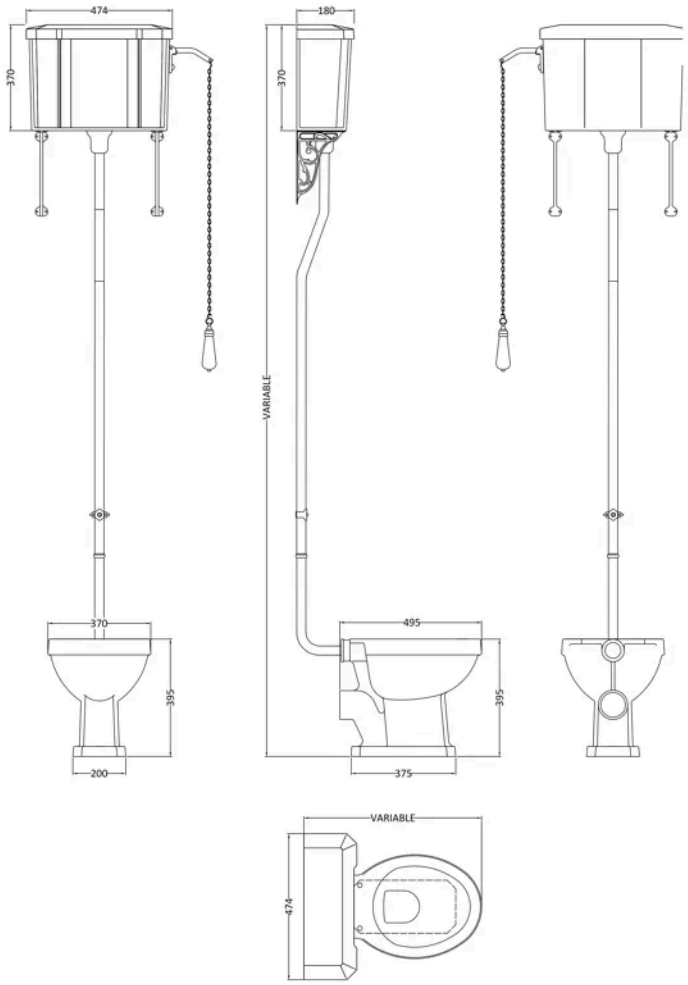

Product Dimensions

Product	2140 x 465 x 625mm (H x W x D)
Packaged	550 x 550 x 550mm (H x W x D)
Nett Weight	32.41 kg
Packaged Weight	32.91 kg

Product Details

Country of Origin	China
Product Material	Vitreous China
Colour/Finish	Gloss White
Style	Traditional
Ce Certified	Yes
Includes Seat	No
Pan Type	Open To Wall

© ROXOR Group

Sales Code: FA313 **Barcode:** 5055146108092 **Brand:** nuie **Description:** Chrome High Level Flush Pipe Pack



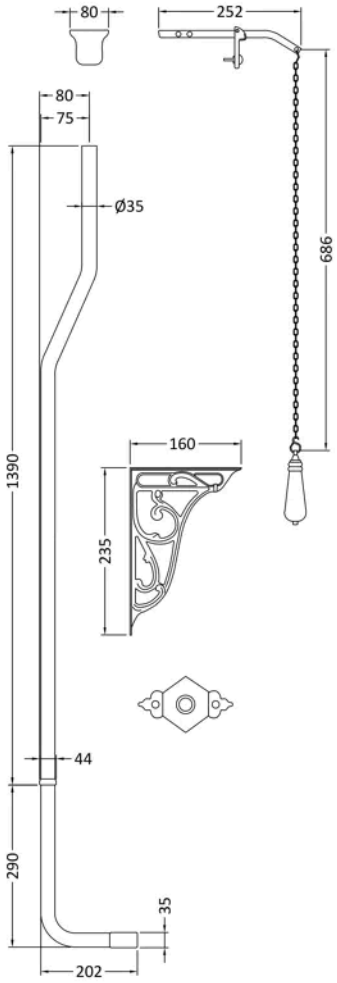

Product Dimensions

Product	1680 x 80 x 202mm (H x W x D)
Packaged	100 x 185 x 1435mm (H x W x D)
Nett Weight	2.8 kg
Packaged Weight	3.07 kg

Packaging Details

Box Qty	1
Label Size (mm)	50 x 100
Label Colour	White
Label Qty	2.0000

Product Details

Country of Origin	China
Product Material	Brass
Colour/Finish	Chrome
Style	Traditional
Fixings Included	Yes
Product Diameter	35 mm

© ROXOR Group

Sales Code: NCS870 **Barcode:** 5055369040131 **Brand:** Old London **Description:** Richmond Traditional Pan



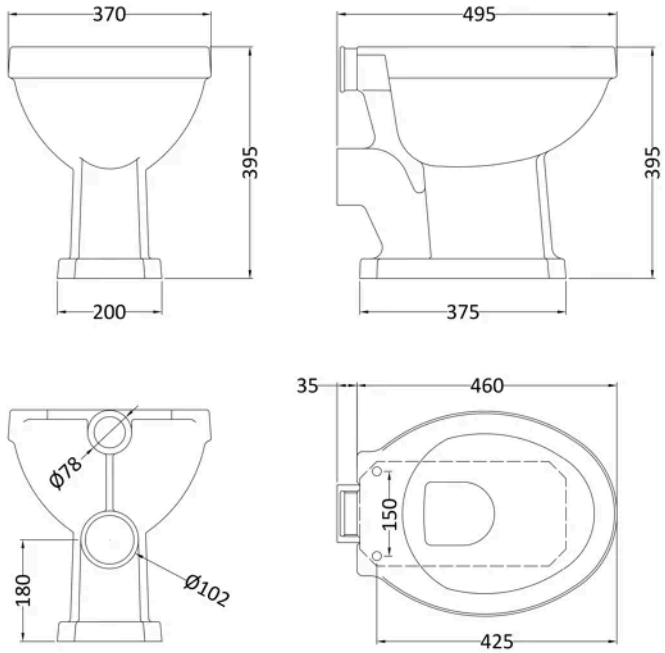

Product Dimensions

Product	395 x 370 x 495mm (H x W x D)
Packaged	425 x 525 x 430mm (H x W x D)
Nett Weight	15.61 kg
Packaged Weight	16.5 kg

Packaging Details

Box Qty	1

Product Details

Country of Origin	China
Product Material	Vitreous China
Colour/Finish	White
Style	Traditional
Ce Certified	Yes
Includes Seat	No
Pan Type	Open To Wall

© ROXOR Group

Sales Code: NCS872B **Barcode:** 5055369040179 **Brand:** Old London **Description:** Old London Richmond High Level Cistern B (With Fittings)



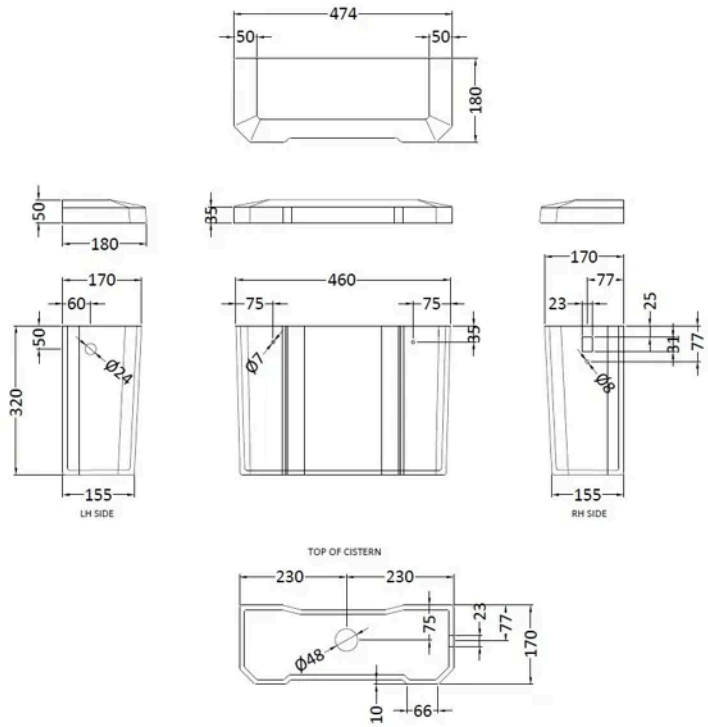

Product Dimensions

Packaged	316 x 168 x 455mm (H x W x D)
Nett Weight	14.5 kg
Packaged Weight	15.9 kg

Packaging Details

Box Qty	1

Product Details

Country of Origin	China
Colour/Finish	White
Ce Certified	Yes

© ROXOR Group