Sales Code: CCL006 **Barcode:** 5055275867679 **Brand:** Hudson Reed **Description:** Hudson Reed Maya 1 Tap Hole 650mm Ceramic Basin & Semi Pedestal



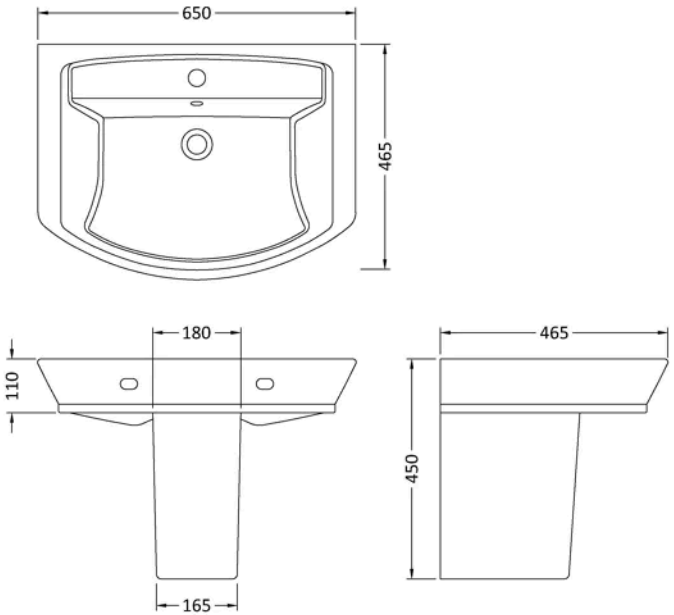

Product Dimensions

Product	450 x 650 x 465mm (H x W x D)
Packaged	550 x 550 x 550mm (H x W x D)
Nett Weight	24.8 kg
Packaged Weight	24.8 kg

Packaging Details

Box Qty	2

Product Details

Country of Origin	Turkey
Product Material	Vitreous China
Colour/Finish	White
Style	Contemporary
Ce Certified	Yes
Inner Bowl Height	100 mm
No. Of Tapholes	1
Number Of Bowls	1
Overflow Included	Yes
Tap Included	No
Waste Included	No

© ROXOR Group

Sales Code: NCT322 **Barcode:** 5055369063277 **Brand:** Hudson Reed **Description:** Hudson Reed Maya 1 Tap Hole 650mm Ceramic Basin



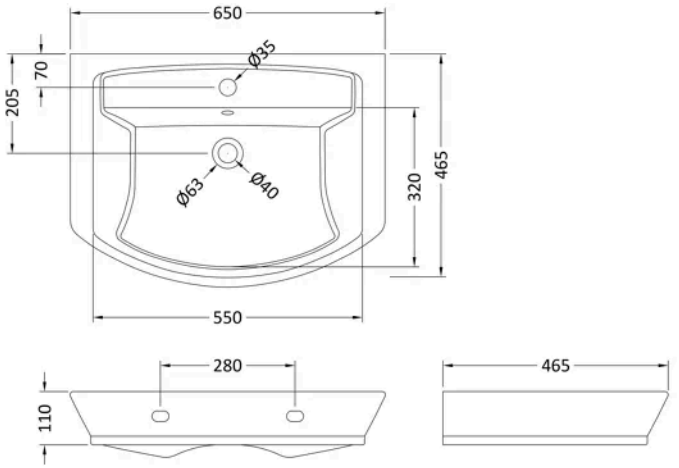

Product Dimensions

Product	110 x 650 x 465mm (H x W x D)
Packaged	725 x 190 x 495mm (H x W x D)
Nett Weight	17.8 kg
Packaged Weight	17.8 kg

Packaging Details

Box Qty	1

Product Details

Country of Origin	Turkey
Product Material	Vitreous China
Colour/Finish	White
Ce Certified	Yes
Inner Bowl Height	100 mm
No. Of Tapholes	1
Number Of Bowls	1

© ROXOR Group

Sales Code: NCU607 **Barcode:** 5055369030866 **Brand:** Hudson Reed **Description:** Hudson Reed Maya White Contemporary Semi Pedestal



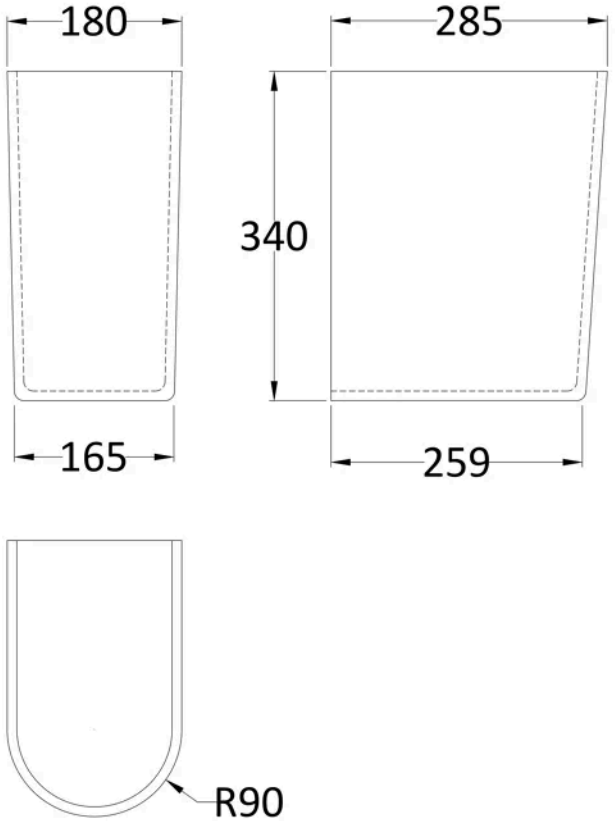

Product Dimensions

Product	340 x 180 x 285mm (H x W x D)
Packaged	335 x 320 x 222mm (H x W x D)
Nett Weight	7 kg
Packaged Weight	7 kg

Packaging Details

Box Qty	1

Product Details

Country of Origin	Turkey
Colour/Finish	White
Ce Certified	Yes

© ROXOR Group