Sales Code: CBW002 **Barcode:** 5056211875147 **Brand:** Hudson Reed **Description:** Hudson Reed Comfort Height Back to Wall Round Toilet Pan With Soft Close Seat



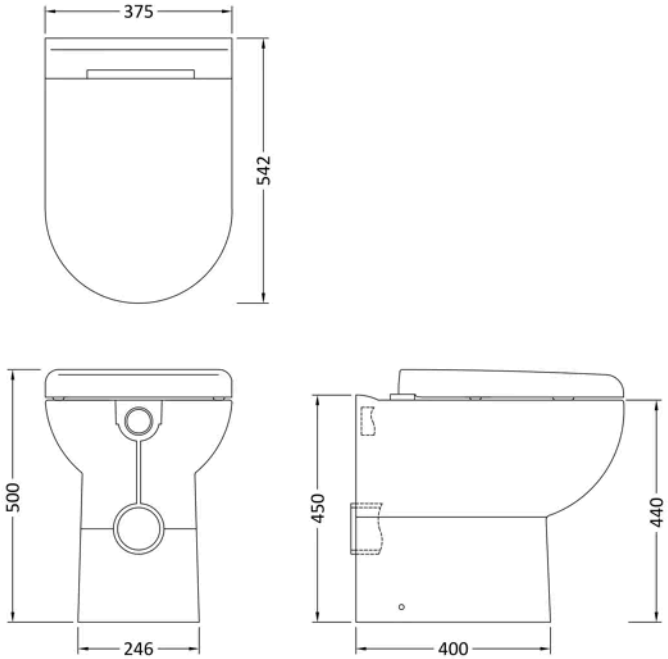

Product Dimensions

Product	500 x 375 x 545mm (H x W x D)
Packaged	420 x 395 x 540mm (H x W x D)
Nett Weight	24.94 kg
Packaged Weight	25.44 kg

Product Details

Country of Origin	China
Product Material	Vitreous China
Colour/Finish	Gloss White
Style	Contemporary
Ce Certified	Yes
Includes Seat	Yes
Pan Type	Back To Wall

© ROXOR Group

Sales Code: BTW006 **Barcode:** 5056211803379 **Brand:** nuie **Description:** nuie Lawton Round Back to Wall Toilet Pan



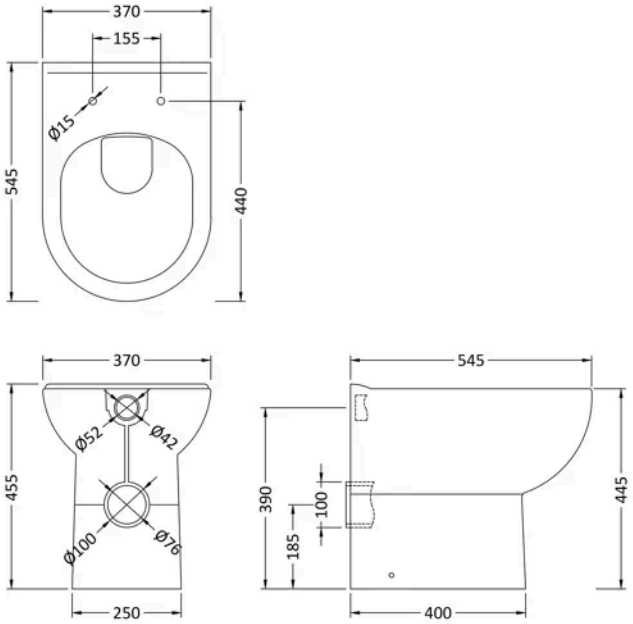

Product Dimensions

Product	445 x 370 x 545mm (H x W x D)
Packaged	490 x 400 x 560mm (H x W x D)
Nett Weight	23.6 kg
Packaged Weight	24 kg

Packaging Details

Box Qty	1

Product Details

Country of Origin	China
Product Material	Vitreous China
Colour/Finish	White
Style	Contemporary
Ce Certified	Yes
Includes Seat	No
Pan Type	Back To Wall

© ROXOR Group

Sales Code: NTS002 **Barcode:** 5060272824853 **Brand:** nuie **Description:** White D-Shaped Soft Close Toilet Seat With Top Fix Hinge



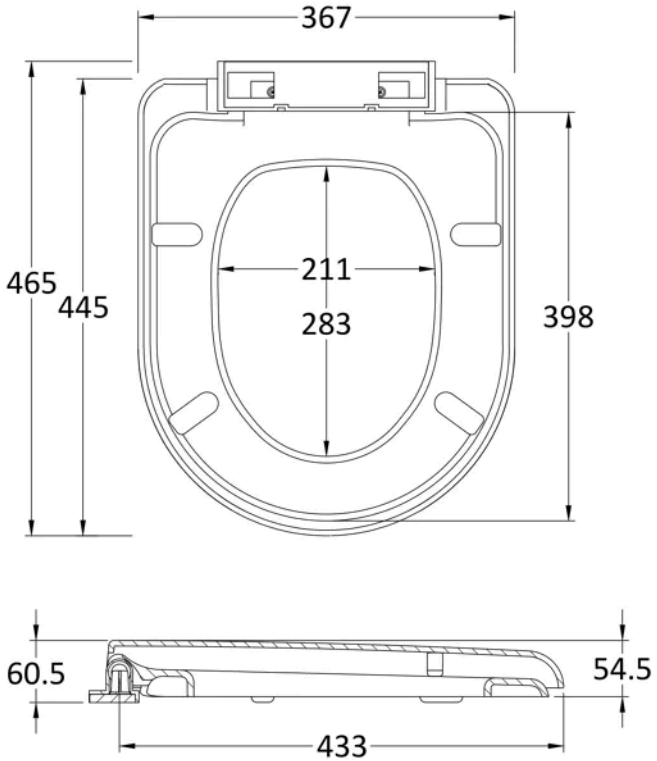

Product Dimensions

Product	47 x 365 x 465mm (H x W x D)
Packaged	55 x 380 x 465mm (H x W x D)
Outer Box	400mm (H)
Nett Weight	1.84 kg
Packaged Weight	2.02 kg

Packaging Details

Box Qty	1
Label Size (mm)	50 x 100

Product Details

Country of Origin	China
Product Material	Polypropylene
Colour/Finish	White
Style	Contemporary
Fixings Included	Yes
Ce Certified	No
Declaration Of Performance	No
Hinge Centres (Max)	172 mm
Hinge Centres (Min)	128 mm
Toilet Seat Function	Soft Close
Toilet Seat Hinge Type	Top Fix
Toilet Seat Type	D Shape

© ROXOR Group