Sales Code: CBM603 **Barcode:** 5056678485231 **Brand:** nuie **Description:** 1 Tap Hole 600mm Contemporary Fireclay Basin



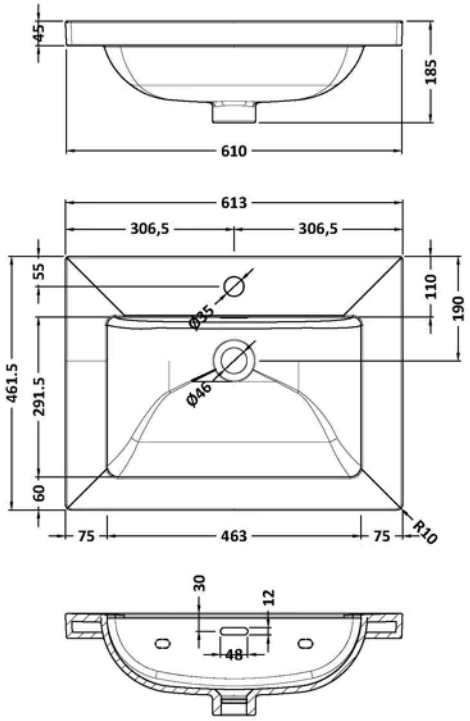

Product Dimensions

Product	45 x 610 x 460mm (H x W x D)
Packaged	490 x 650 x 220mm (H x W x D)
Nett Weight	17 kg
Packaged Weight	17 kg

Packaging Details

Box Qty	1
Label Size (mm)	100 x 50
Label Colour	White
Label Qty	2.0000

Product Details

Country of Origin	United Arab Emirates
Product Material	Fireclay
Colour/Finish	White
Style	Contemporary
Fixings Included	No
Bottle Trap Included	No
Ce Certified	Yes
Inner Bowl Depth	292 mm
Inner Bowl Height	135 mm
Inner Bowl Width	463 mm
No. Of Tapholes	1
Number Of Bowls	1
Overflow Cover Included	No
Overflow Included	Yes
Tap Included	No
Waste Included	No

© ROXOR Group