Sales Code: CBM313 **Barcode:** 5056211875833 **Brand:** nuie **Description:** nuie Arno Compact 1 Tap Hole 620mm Ceramic Basin



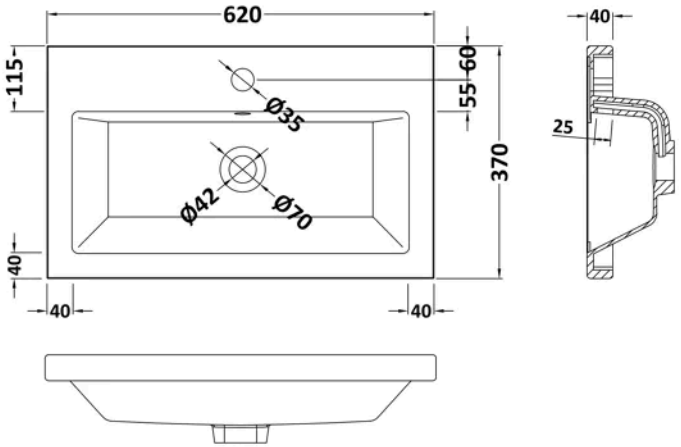

Product Dimensions

Product	150 x 620 x 370mm (H x W x D)
Packaged	410 x 200 x 650mm (H x W x D)
Nett Weight	9.66 kg
Packaged Weight	9.66 kg

Packaging Details

Box Qty	1

Product Details

Country of Origin	China
Product Material	Vitreous China
Colour/Finish	White
Style	Contemporary
Ce Certified	Yes
Inner Bowl Height	103 mm
No. Of Tapholes	1
Number Of Bowls	1
Overflow Included	Yes
Tap Included	No
Waste Included	No

© ROXOR Group