Sales Code: CBL006 **Barcode:** 5060272826123 **Brand:** Hudson Reed **Description:** Hudson Reed Square Back to Wall Toilet Pan With Seat



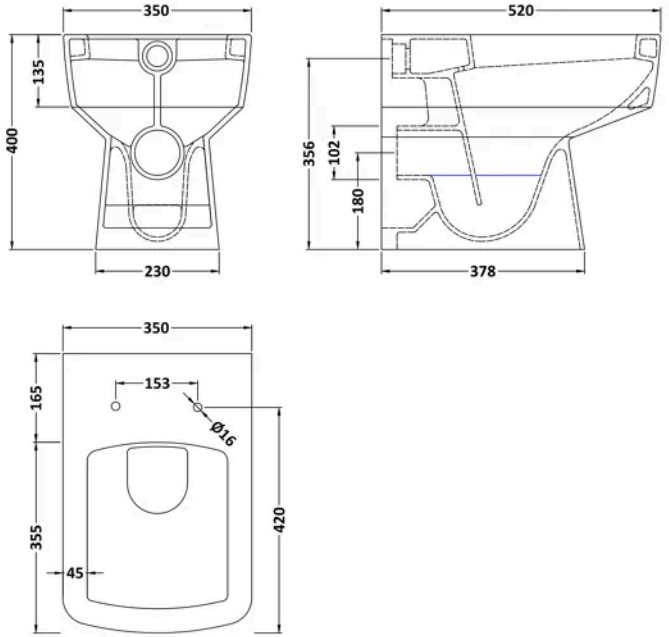

Product Dimensions

Product	400 x 350 x 520mm (H x W x D)
Packaged	470 x 430 x 570mm (H x W x D)
Nett Weight	26.12 kg
Packaged Weight	26.62 kg

Product Details

Country of Origin	United Kingdom
Product Material	Vitreous China
Colour/Finish	Gloss White
Style	Contemporary
Ce Certified	Yes
Includes Seat	Yes
Pan Type	Back To Wall

© ROXOR Group

Sales Code: NCH106B **Barcode:** 5055369029112 **Brand:** nuie **Description:** nuie Bliss Square Back to Wall Toilet Pan



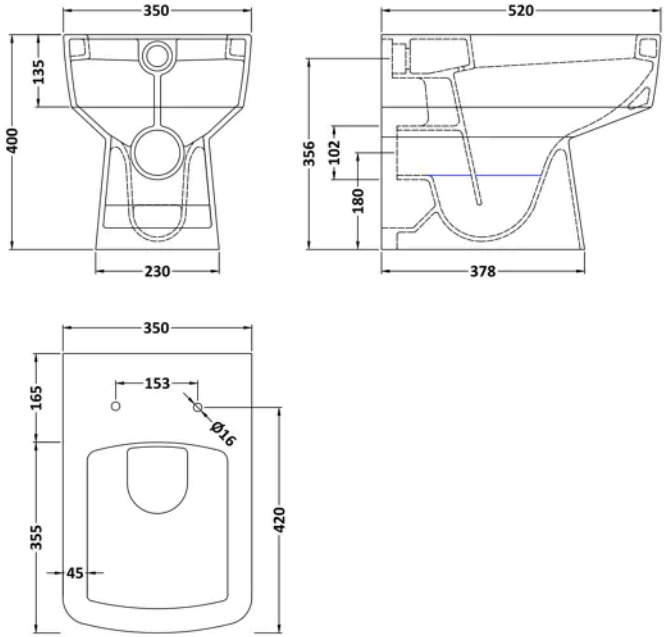

Product Dimensions

Product	400 x 350 x 520mm (H x W x D)
Packaged	410 x 365 x 545mm (H x W x D)
Nett Weight	24.5 kg
Packaged Weight	25 kg

Product Details

Country of Origin	China
Product Material	Vitreous China
Colour/Finish	White
Style	Contemporary
Ce Certified	Yes
Includes Seat	No
Pan Type	Back To Wall

© ROXOR Group

Sales Code: NCH198 **Barcode:** 5060272825744 **Brand:** nuie **Description:** Gloss White D-Shaped Soft Close Toilet Seat With Quick Release Hinge



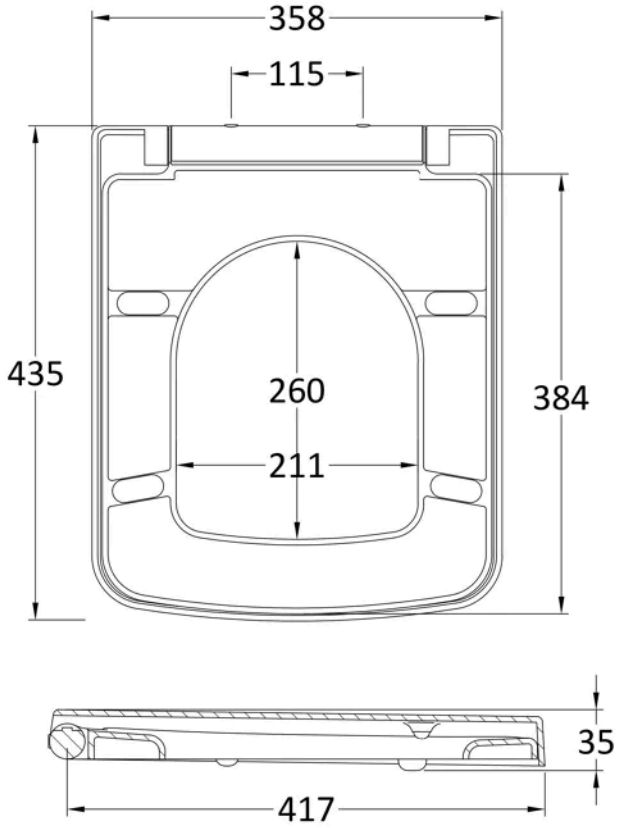

Product Dimensions

Product	53 x 358 x 435mm (H x W x D)
Packaged	60 x 380 x 460mm (H x W x D)
Outer Box	390mm (H)
Nett Weight	2.12 kg
Packaged Weight	2.67 kg

Packaging Details

Label Size (mm)	50 x 100

Product Details

Country of Origin	China
Product Material	Stainless Steel Nylon,Urea
Colour/Finish	White
Style	Contemporary
Fixings Included	Yes
Ce Certified	No
Declaration Of Performance	No
Hinge Centres (Min)	115 mm
Toilet Seat Function	Soft Close
Toilet Seat Hinge Type	Quick Release
Toilet Seat Type	D Shape

© ROXOR Group