Sales Code: CBI940A **Barcode:** 5056211889342 **Brand:** Hudson Reed **Description:** Hudson Reed Fusion Gloss Grey 500mm 2 Door Wall Hung Vanity Unit With Basin



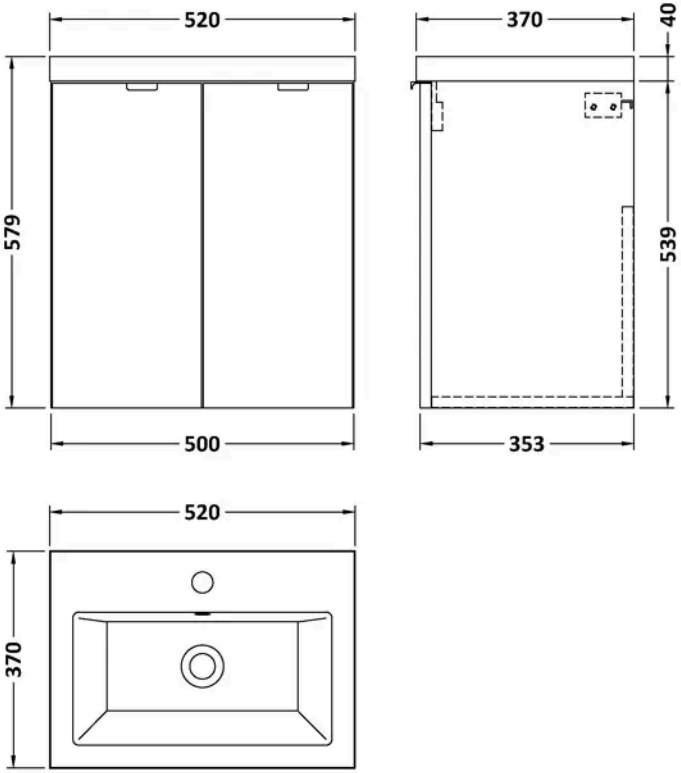

Product Dimensions

Product	579 x 505 x 360mm (H x W x D)
Packaged	550 x 550 x 550mm (H x W x D)
Nett Weight	19.1 kg
Packaged Weight	19.6 kg

Packaging Details

Box Qty	2

Product Details

Country of Origin	United Kingdom
Product Material	Mfc Painted Gloss
Colour/Finish	Gloss Grey
Mount Type	Wall Hung
Style	Contemporary
Handle Type	Finger Pull
Construction Method	Cam & Wood Dowel
Construction Type	Rigid
Fascia Finish	Mfc Painted Gloss
Fsc Certified	Yes
Handles Included	Yes
Inner Bowl Height	103 mm
Material Thickness	16 mm
No. Doors	2
No. Of Tapholes	1
Number Of Bowls	1
Overflow Included	Yes
Tap Included	No
Waste Included	No
Waste Shroud	No

© ROXOR Group

Sales Code: CBM312 **Barcode:** 5056211875819 **Brand:** nuie **Description:** nuie Arno Compact 1 Tap Hole 520mm Ceramic Basin



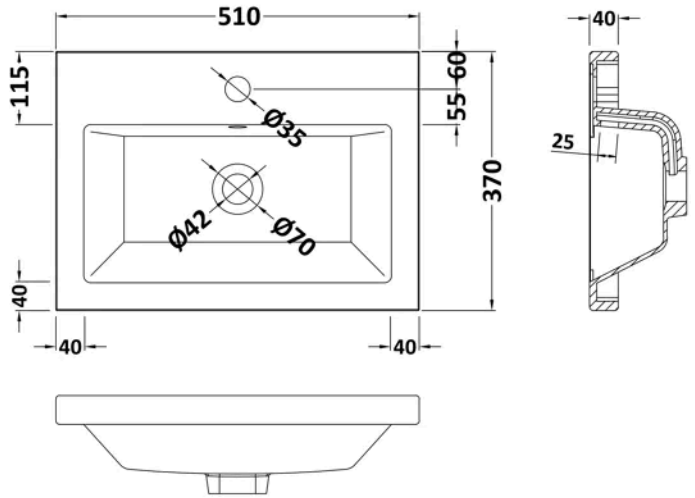

Product Dimensions

Product	150 x 520 x 370mm (H x W x D)
Packaged	420 x 210 x 550mm (H x W x D)
Nett Weight	8.1 kg
Packaged Weight	8.1 kg

Packaging Details

Box Qty	1

Product Details

Country of Origin	China
Product Material	Vitreous China
Colour/Finish	White
Style	Contemporary
Ce Certified	Yes
Inner Bowl Height	103 mm
No. Of Tapholes	1
Number Of Bowls	1
Overflow Included	Yes
Tap Included	No
Waste Included	No

© ROXOR Group

Sales Code: OFF935 **Barcode:** 5056211848837 **Brand:** Hudson Reed **Description:** Hudson Reed Fusion 500mm 2 Door Wall Hung Vanity Unit



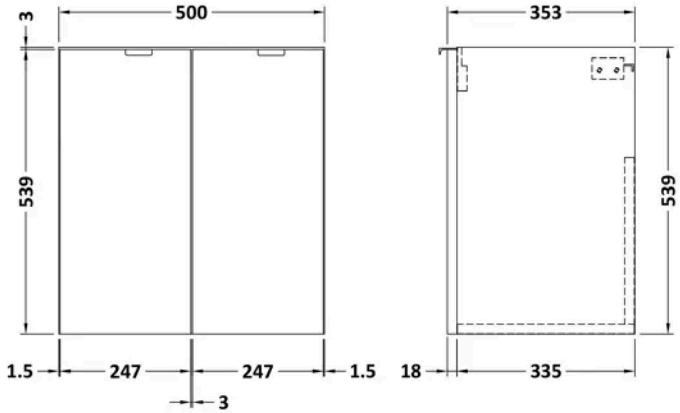

Product Dimensions

Product	540 x 500 x 253mm (H x W x D)
Packaged	560 x 520 x 375mm (H x W x D)
Nett Weight	11.5 kg
Packaged Weight	12 kg

Packaging Details

Box Qty	1

Product Details

Country of Origin	United Kingdom
Product Material	Mfc Painted Gloss
Colour/Finish	Gloss Grey
Mount Type	Wall Hung
Style	Contemporary
Construction Method	Cam & Wood Dowel
Construction Type	Rigid
Fascia Finish	Mfc Painted Gloss
Handles Included	Yes
Material Thickness	18 mm
No. Doors	2
No. Shelves	1
Number Of Shelves	1

© ROXOR Group