Sales Code: CBI933A

Barcode: 5056211889137

Brand: Hudson Reed

Description: Hudson Reed Fusion Gloss Grey 1200mm 4 Door Wall Hung Vanity Unit With 2 Tap Holes Basin



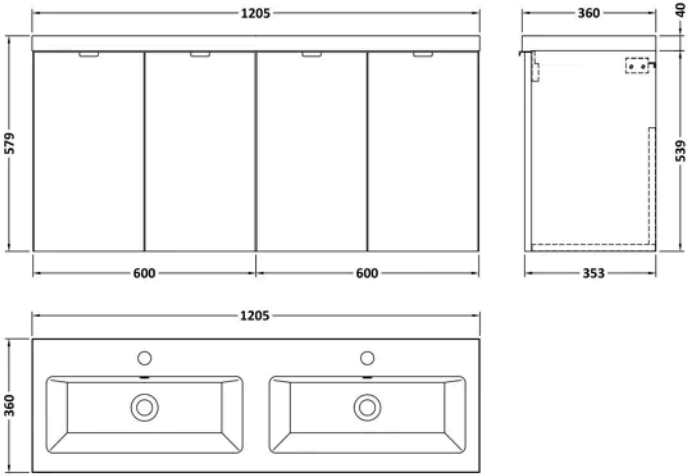

Product Dimensions

Product	579 x 1208 x 360mm (H x W x D)
Packaged	550 x 550 x 550mm (H x W x D)
Nett Weight	43.62 kg
Packaged Weight	44.12 kg

Packaging Details

Box Qty	3

Product Details

Country of Origin	United Kingdom
Product Material	Mfc Painted Gloss
Colour/Finish	Gloss Grey
Mount Type	Wall Hung
Style	Contemporary
Handle Type	Finger Pull
Construction Method	Cam & Wood Dowel
Construction Type	Rigid
Fascia Finish	Mfc Painted Gloss
Fsc Certified	Yes
Handles Included	Yes
Inner Bowl Height	103 mm
Leg Set Included	No
Material Thickness	16 mm
No. Doors	2
No. Of Tapholes	2
Number Of Bowls	2
Overflow Included	Yes
Tap Included	No
Waste Included	No
Waste Shroud	No

© ROXOR Group

Sales Code: CBM425 **Barcode:** 5056211875840 **Brand:** Hudson Reed **Description:** Hudson Reed Fusion 2 Tap Hole 1200mm Ceramic Twin Basin



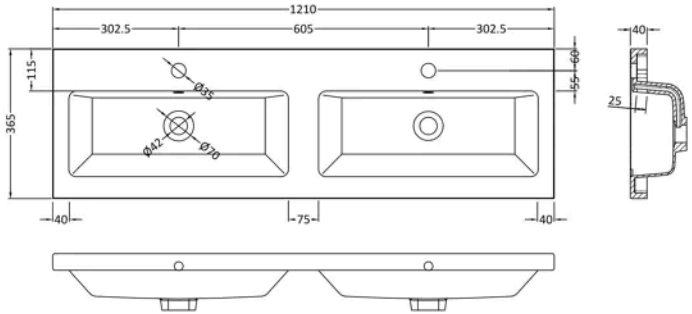

Product Dimensions

Product	115 x 1210 x 365mm (H x W x D)
Packaged	100 x 1205 x 360mm (H x W x D)
Nett Weight	18.12 kg
Packaged Weight	18.12 kg

Packaging Details

Box Qty	1

Product Details

Country of Origin	China
Product Material	Vitreous China
Colour/Finish	White
Style	Contemporary
Ce Certified	Yes

© ROXOR Group

Sales Code: OFF966 **Barcode:** 5056211816461 **Brand:** Hudson Reed **Description:** Hudson Reed Fusion 600mm 2 Door Wall Hung Vanity Unit



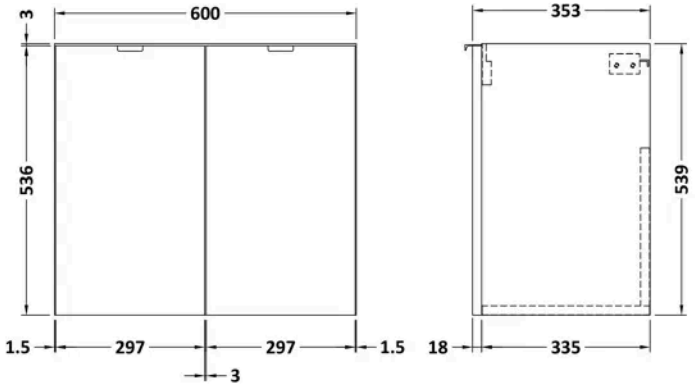

Product Dimensions

Product	540 x 600 x 360mm (H x W x D)
Packaged	375 x 625 x 560mm (H x W x D)
Nett Weight	13 kg
Packaged Weight	13.5 kg

Packaging Details

Box Qty	1

Product Details

Country of Origin	United Kingdom
Product Material	Mfc Painted Gloss
Colour/Finish	Gloss Grey
Mount Type	Wall Hung
Style	Contemporary
Construction Method	Cam & Wood Dowel
Construction Type	Rigid
Fascia Finish	Mfc Painted Gloss
Handles Included	Yes
Material Thickness	18 mm
No. Doors	2
No. Shelves	1
Number Of Shelves	1

© ROXOR Group