**Sales Code:** CBI932A

**Barcode:** 5056211889120

**Brand:** Hudson Reed

**Description:** Hudson Reed Fusion Gloss Grey 1200mm 4 Drawer Wall Hung Vanity Unit With 2 Tap Holes Basin

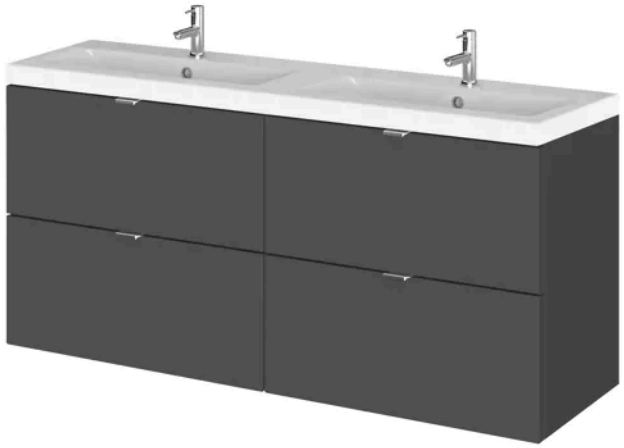

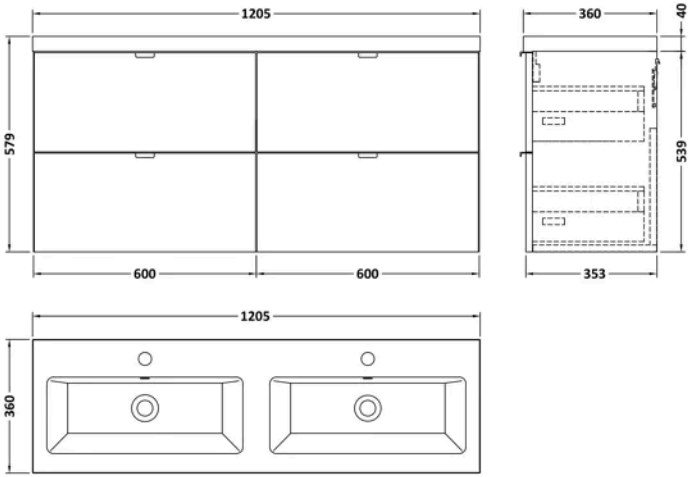


## Product Dimensions

| | |
|---|---|
| Product | 579 x 1208 x 360mm (H x W x D) |
| Packaged | 550 x 550 x 550mm (H x W x D) |
| Nett Weight | 59.62 kg |
| Packaged Weight | 60.12 kg |

## Packaging Details

| | |
|---|---|
| Box Qty | 3 |

## Product Details

| | |
|---|---|
| Country of Origin | United Kingdom |
| Product Material | Mfc Painted Gloss |
| Colour/Finish | Gloss Grey |
| Mount Type | Wall Hung |
| Style | Contemporary |
| Handle Type | Finger Pull |
| Construction Method | Cam & Wood Dowel |
| Construction Type | Rigid |
| Drawer Type | 80mm High Metal Soft-close |
| Fascia Finish | Mfc Painted Gloss |
| Fsc Certified | Yes |
| Handles Included | Yes |
| Inner Bowl Height | 103 mm |
| Leg Set Included | No |
| Material Thickness | 16 mm |
| No. Drawers | 4 |
| No. Of Tapholes | 2 |
| Number Of Bowls | 2 |
| Overflow Included | Yes |
| Tap Included | No |
| Waste Included | No |
| Waste Shroud | Yes |

© ROXOR Group

**Sales Code:** CBM425 **Barcode:** 5056211875840 **Brand:** Hudson Reed **Description:** Hudson Reed Fusion 2 Tap Hole 1200mm Ceramic Twin Basin



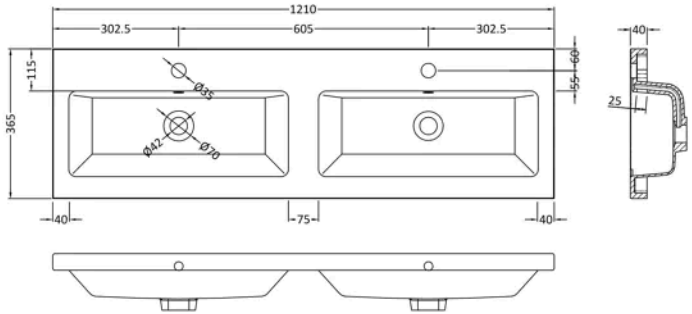


## Product Dimensions

| | |
|---|---|
| Product | 115 x 1210 x 365mm (H x W x D) |
| Packaged | 100 x 1205 x 360mm (H x W x D) |
| Nett Weight | 18.12 kg |
| Packaged Weight | 18.12 kg |

## Packaging Details

| | |
|---|---|
| Box Qty | 1 |

## Product Details

| | |
|---|---|
| Country of Origin | China |
| Product Material | Vitreous China |
| Colour/Finish | White |
| Style | Contemporary |
| Ce Certified | Yes |

© ROXOR Group

**Sales Code:** OFF937 **Barcode:** 5056211812968 **Brand:** Hudson Reed **Description:** Hudson Reed Fusion 600mm 2 Drawer Wall Hung Vanity Unit



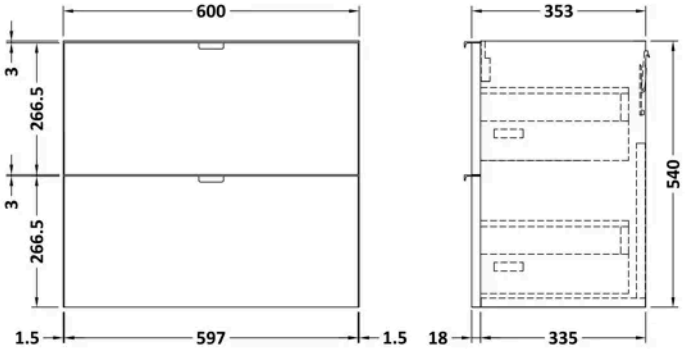


## Product Dimensions

| | |
|---|---|
| Product | 540 x 600 x 353mm (H x W x D) |
| Packaged | 375 x 620 x 560mm (H x W x D) |
| Nett Weight | 21 kg |
| Packaged Weight | 21.5 kg |

## Packaging Details

| | |
|---|---|
| Box Qty | 1 |

## Product Details

| | |
|---|---|
| Country of Origin | United Kingdom |
| Product Material | Mfc Painted Gloss |
| Colour/Finish | Gloss Grey |
| Mount Type | Wall Hung |
| Style | Contemporary |
| Construction Method | Cam & Wood Dowel |
| Construction Type | Rigid |
| Fascia Finish | Mfc Painted Gloss |
| Handles Included | Yes |
| Material Thickness | 18 mm |
| No. Drawers | 2 |

© ROXOR Group