Sales Code: CBI932

Barcode: 5056211816669

Brand: Hudson Reed

Description: Hudson Reed Fusion Gloss Grey 1200mm 4 Drawer Wall Hung Vanity Unit With 2 Tap Holes Double Basin

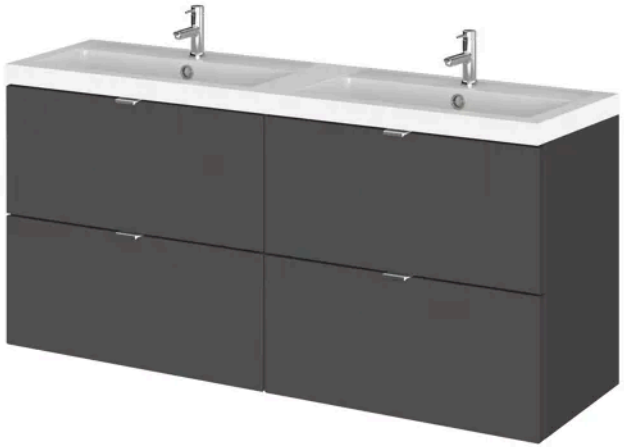

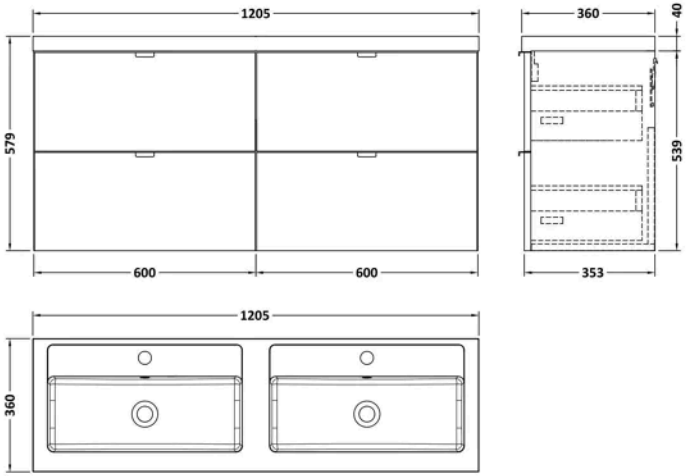

Product Dimensions

Product	579 x 1205 x 360mm (H x W x D)
Packaged	55 x 55 x 55mm (H x W x D)
Nett Weight	59.62 kg
Packaged Weight	60.12 kg

Product Details

Country of Origin	United Kingdom
Product Material	Mfc Painted Gloss
Colour/Finish	Gloss Grey
Mount Type	Wall Hung
Style	Contemporary
Handle Type	Finger Pull
Construction Method	Cam & Wood Dowel
Construction Type	Rigid
Drawer Type	80mm High Metal Soft-close
Fascia Finish	Mfc Painted Gloss
Fsc Certified	Yes
Handles Included	Yes
Inner Bowl Height	103 mm
Leg Set Included	No
Material Thickness	16 mm
No. Drawers	4
No. Of Tapholes	2
Number Of Bowls	2
Overflow Included	Yes
Tap Included	No
Waste Included	No
Waste Shroud	Yes

© ROXOR Group

Sales Code: OFF937 **Barcode:** 5056211812968 **Brand:** Hudson Reed **Description:** Hudson Reed Fusion 600mm 2 Drawer Wall Hung Vanity Unit



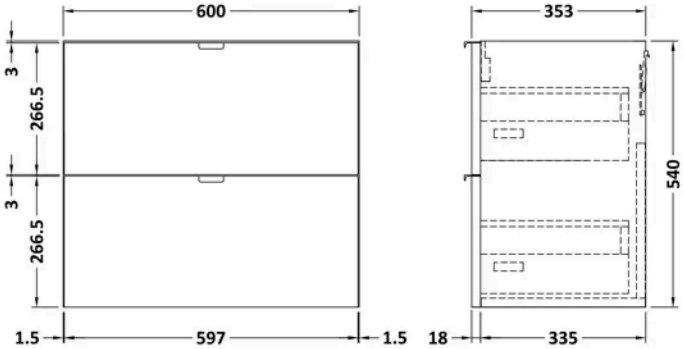

Product Dimensions

Product	540 x 600 x 353mm (H x W x D)
Packaged	375 x 620 x 560mm (H x W x D)
Nett Weight	21 kg
Packaged Weight	21.5 kg

Packaging Details

Box Qty	1

Product Details

Country of Origin	United Kingdom
Product Material	Mfc Painted Gloss
Colour/Finish	Gloss Grey
Mount Type	Wall Hung
Style	Contemporary
Construction Method	Cam & Wood Dowel
Construction Type	Rigid
Fascia Finish	Mfc Painted Gloss
Handles Included	Yes
Material Thickness	18 mm
No. Drawers	2

© ROXOR Group

Sales Code: PMB425 **Barcode:** 5056211815143 **Brand:** Hudson Reed **Description:** Hudson Reed 1200mm 2 Tap Hole Twin Polymarble Basin



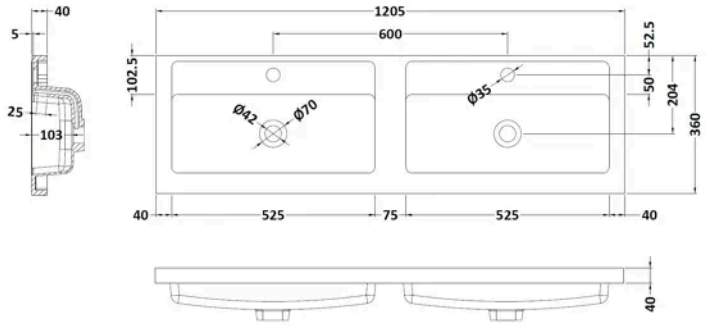

Product Dimensions

Product	135 x 1205 x 360mm (H x W x D)
Packaged	100 x 1205 x 360mm (H x W x D)
Nett Weight	18.12 kg
Packaged Weight	18.12 kg

Packaging Details

Box Qty	1

Product Details

Country of Origin	China
Product Material	Polymarble
Colour/Finish	White
Style	Contemporary
Ce Certified	Yes
No. Of Tapholes	2

© ROXOR Group