Sales Code: CBI928A **Barcode:** 5056211889694 **Brand:** Hudson Reed **Description:** Hudson Reed Fusion Gloss Grey 800mm 2 Door Floor Standing Vanity Unit With Basin



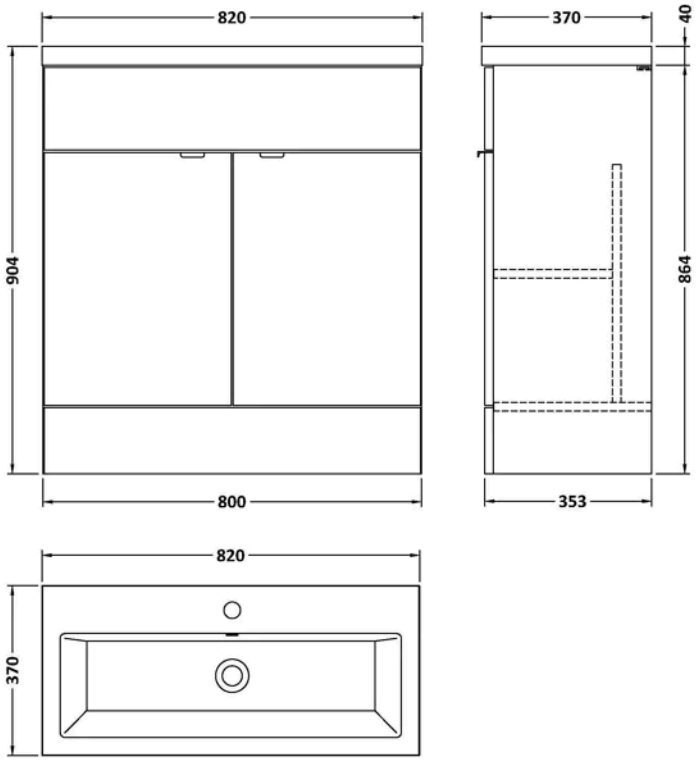

Product Dimensions

Product	904 x 805 x 360mm (H x W x D)
Packaged	550 x 550 x 550mm (H x W x D)
Nett Weight	36 kg
Packaged Weight	36.5 kg

Packaging Details

Box Qty	2

Product Details

Country of Origin	United Kingdom
Product Material	Mfc Painted Gloss
Colour/Finish	Gloss Grey
Mount Type	Floor
Style	Contemporary
Handle Type	Finger Pull
Construction Method	Cam & Wood Dowel
Construction Type	Rigid
Fascia Finish	Mfc Painted Gloss
Fsc Certified	Yes
Handles Included	Yes
Inner Bowl Height	103 mm
Leg Set Included	No
Material Thickness	16 mm
No. Doors	2
No. Of Tapholes	1
No. Shelves	1
Number Of Bowls	1
Number Of Shelves	1
Overflow Included	Yes
Tap Included	No
Waste Included	No
Waste Shroud	No

© ROXOR Group

Sales Code: CBM315 **Barcode:** 5056211875796 **Brand:** Hudson Reed **Description:** 1 Tap Hole 820mm Ceramic Basin



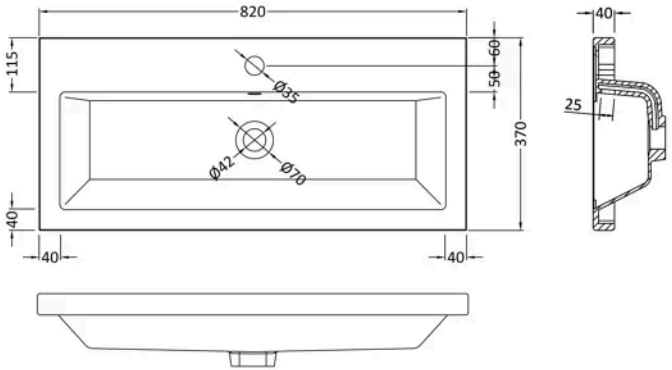

Product Dimensions

Product	150 x 820 x 370mm (H x W x D)
Packaged	200 x 420 x 855mm (H x W x D)
Nett Weight	12 kg
Packaged Weight	12 kg

Packaging Details

Box Qty	1

Product Details

Country of Origin	China
Product Material	Vitreous China
Colour/Finish	White
Style	Contemporary
Ce Certified	Yes

© ROXOR Group

Sales Code: OFF909 **Barcode:** 5055275873489 **Brand:** Hudson Reed **Description:** Hudson Reed Fusion Gloss Grey 800mm Floor Standing Vanity Unit



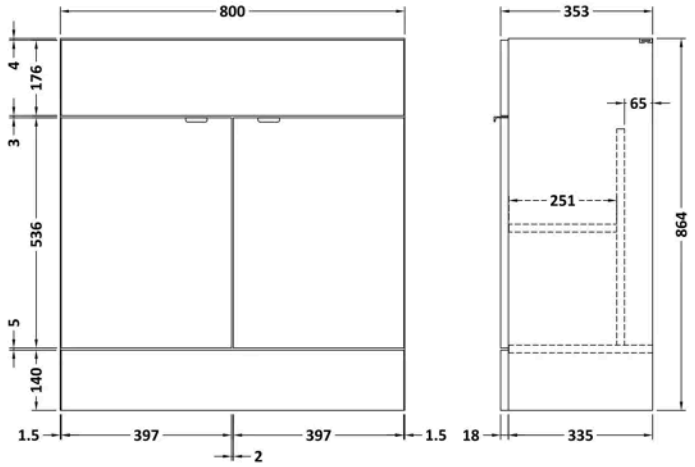

Product Dimensions

Product	864 x 800 x 355mm (H x W x D)
Packaged	375 x 825 x 900mm (H x W x D)
Nett Weight	24.5 kg
Packaged Weight	25 kg

Packaging Details

Box Qty	1

Product Details

Country of Origin	United Kingdom
Product Material	Mfc Painted Gloss
Colour/Finish	Gloss Grey
Mount Type	Floor
Style	Contemporary
Handle Type	Finger Pull
Construction Method	Cam & Wood Dowel
Construction Type	Rigid
Fascia Finish	Mdf Painted Gloss
Fsc Certified	Yes
Handles Included	Yes
Material Thickness	16 mm
Waste Shroud	No

© ROXOR Group