Sales Code: CBI634A

Barcode: 5056211889113

Brand: Hudson Reed

Description: Hudson Reed Fusion Charcoal Black Woodgrain 1200mm 4 Door Floor standing Vanity Unit With 2 Tap Holes Basin



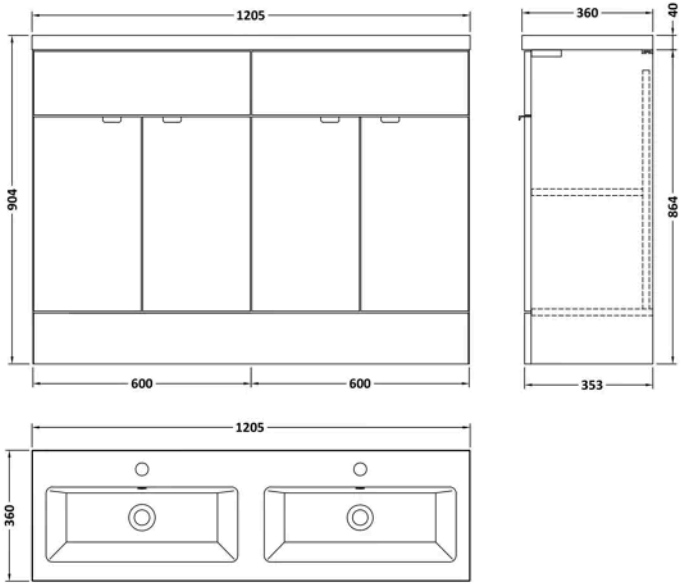

Product Dimensions

Product	904 x 1208 x 360mm (H x W x D)
Packaged	550 x 550 x 550mm (H x W x D)
Nett Weight	58.62 kg
Packaged Weight	59.12 kg

Packaging Details

Box Qty	3

Product Details

Country of Origin	United Kingdom
Product Material	Mfc Textured Woodgrain
Colour/Finish	Charcoal Black Woodgrain
Mount Type	Floor
Style	Contemporary
Handle Type	Finger Pull
Construction Method	Cam & Wood Dowel
Construction Type	Rigid
Fascia Finish	Mfc Smooth Woodgrain
Fsc Certified	Yes
Handles Included	Yes
Inner Bowl Height	103 mm
Leg Set Included	No
Material Thickness	18 mm
No. Doors	2
No. Of Tapholes	2
No. Shelves	1
Number Of Bowls	2
Number Of Shelves	1
Overflow Included	Yes
Tap Included	No
Waste Included	No
Waste Shroud	No

© ROXOR Group

Sales Code: CBM425 **Barcode:** 5056211875840 **Brand:** Hudson Reed **Description:** Hudson Reed Fusion 2 Tap Hole 1200mm Ceramic Twin Basin



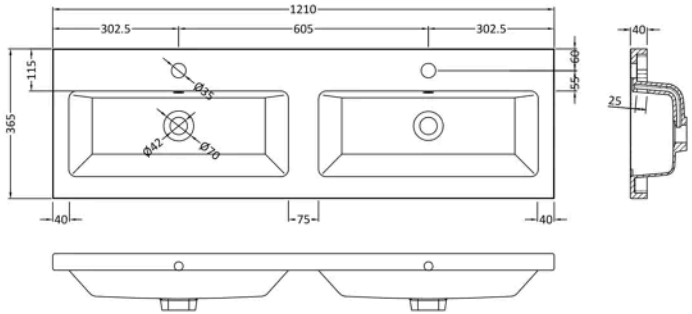

Product Dimensions

Product	115 x 1210 x 365mm (H x W x D)
Packaged	100 x 1205 x 360mm (H x W x D)
Nett Weight	18.12 kg
Packaged Weight	18.12 kg

Packaging Details

Box Qty	1

Product Details

Country of Origin	China
Product Material	Vitreous China
Colour/Finish	White
Style	Contemporary
Ce Certified	Yes

© ROXOR Group

Sales Code: OFF608

Barcode: 5055275817452

Brand: Hudson Reed

Description: Hudson Reed Fusion Charcoal Black Woodgrain 600mm 2 Door Floor Standing Vanity Unit



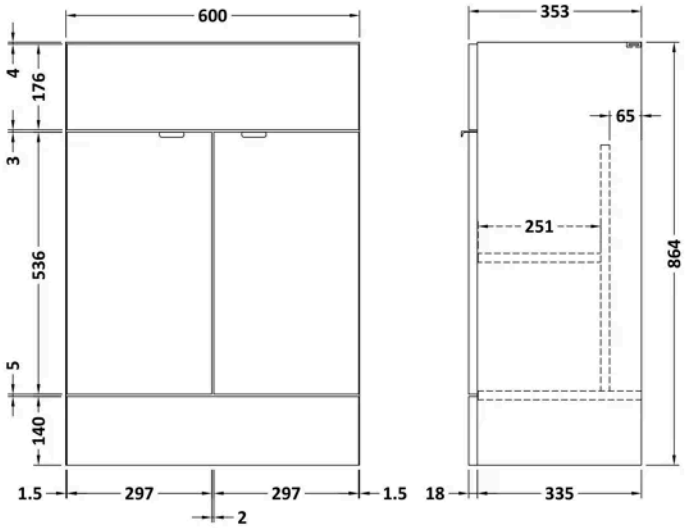

Product Dimensions

Product	864 x 600 x 355mm (H x W x D)
Packaged	375 x 620 x 900mm (H x W x D)
Nett Weight	20.5 kg
Packaged Weight	21 kg

Packaging Details

Box Qty	1

Product Details

Country of Origin	United Kingdom
Product Material	Mfc Textured Woodgrain
Colour/Finish	Charcoal Black Woodgrain
Mount Type	Floor
Style	Contemporary
Handle Type	Finger Pull
Construction Method	Cam & Wood Dowel
Construction Type	Rigid
Fascia Finish	Mfc Textured Woodgrain
Fsc Certified	Yes
Handles Included	Yes
Material Thickness	18 mm
No. Doors	2
Waste Shroud	No

© ROXOR Group