Sales Code: CBI632A

Barcode: 5056211889090

Brand: Hudson Reed

Description: Hudson Reed Fusion Charcoal Black Woodgrain 1200mm 4 Drawer Wall Hung Vanity Unit With 2 Tap Holes Basin



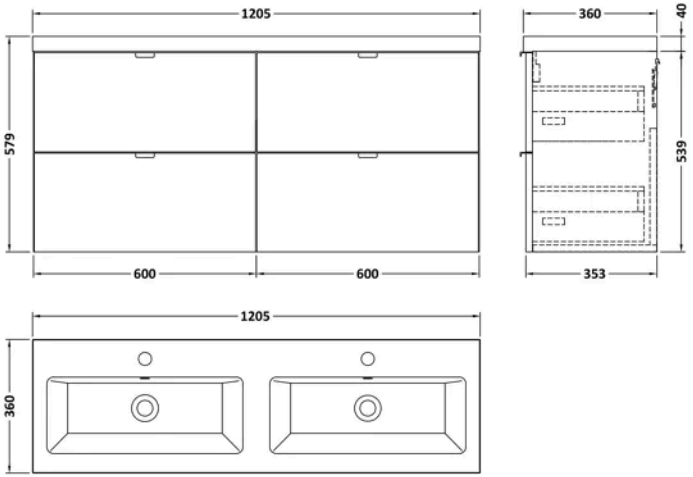

Product Dimensions

Product	579 x 1208 x 360mm (H x W x D)
Packaged	550 x 550 x 550mm (H x W x D)
Nett Weight	59.62 kg
Packaged Weight	60.12 kg

Packaging Details

Box Qty	3

Product Details

Country of Origin	United Kingdom
Product Material	Mfc Textured Woodgrain
Colour/Finish	Charcoal Black Woodgrain
Mount Type	Wall Hung
Style	Contemporary
Handle Type	Finger Pull
Construction Method	Cam & Wood Dowel
Construction Type	Rigid
Drawer Type	80mm High Metal Soft-close
Fascia Finish	Mfc Smooth Woodgrain
Fsc Certified	Yes
Handles Included	Yes
Inner Bowl Height	103 mm
Leg Set Included	No
Material Thickness	18 mm
No. Drawers	4
No. Of Tapholes	2
Number Of Bowls	2
Overflow Included	Yes
Tap Included	No
Waste Included	No
Waste Shroud	Yes

© ROXOR Group

Sales Code: CBM425 **Barcode:** 5056211875840 **Brand:** Hudson Reed **Description:** Hudson Reed Fusion 2 Tap Hole 1200mm Ceramic Twin Basin



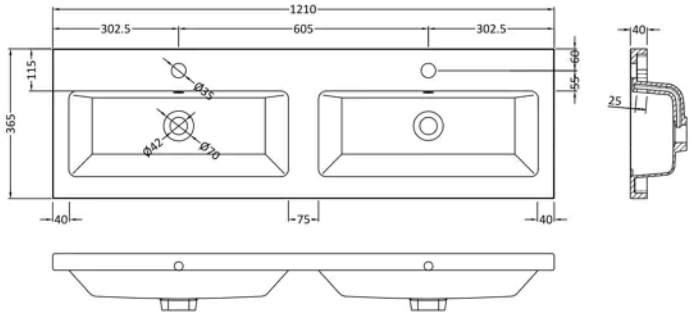

Product Dimensions

Product	115 x 1210 x 365mm (H x W x D)
Packaged	100 x 1205 x 360mm (H x W x D)
Nett Weight	18.12 kg
Packaged Weight	18.12 kg

Packaging Details

Box Qty	1

Product Details

Country of Origin	China
Product Material	Vitreous China
Colour/Finish	White
Style	Contemporary
Ce Certified	Yes

© ROXOR Group

Sales Code: OFF637 **Barcode:** 5056211816171 **Brand:** Hudson Reed **Description:** Hudson Reed Fusion 600mm 2 Drawer Wall Hung Vanity Unit



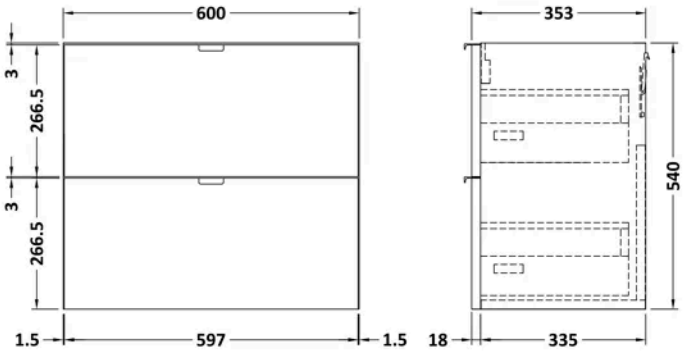

Product Dimensions

Product	540 x 600 x 353mm (H x W x D)
Packaged	375 x 620 x 560mm (H x W x D)
Nett Weight	21 kg
Packaged Weight	21.5 kg

Packaging Details

Box Qty	1

Product Details

Country of Origin	United Kingdom
Product Material	Mfc Textured Woodgrain
Colour/Finish	Charcoal Black Woodgrain
Mount Type	Wall Hung
Style	Contemporary
Construction Method	Cam & Wood Dowel
Construction Type	Rigid
Fascia Finish	Mfc Textured Woodgrain
Handles Included	Yes
Material Thickness	18 mm
No. Drawers	2

© ROXOR Group