**Sales Code:** CBI607

**Barcode:** 5055275887936

**Brand:** Hudson Reed

**Description:** Hudson Reed Fusion Charcoal Black Woodgrain 600mm 2 Door Floor Standing Vanity Unit With Basin



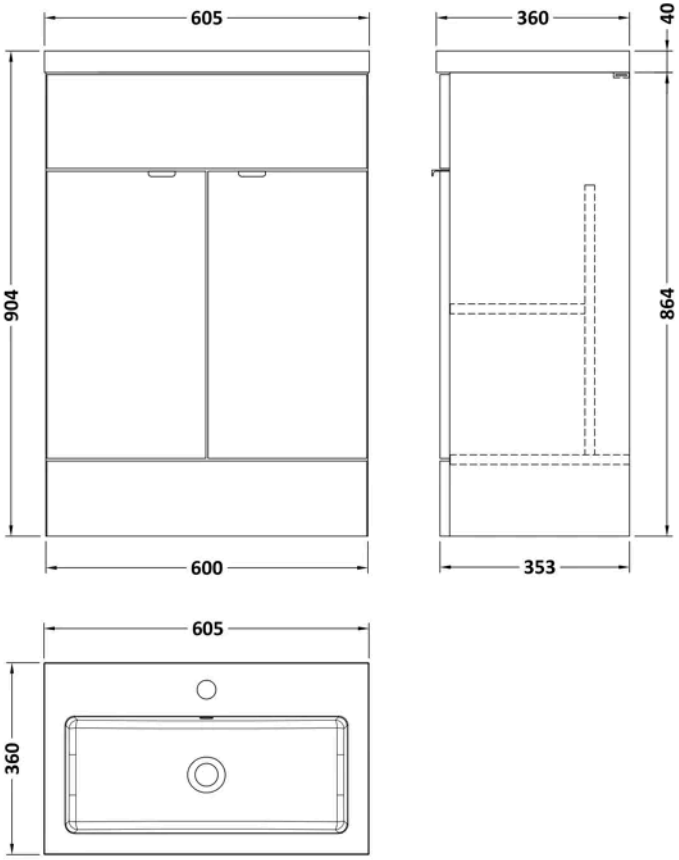


## Product Dimensions

| | |
|---|---|
| Product | 904 x 605 x 360mm (H x W x D) |
| Packaged | 550 x 550 x 550mm (H x W x D) |
| Nett Weight | 29.66 kg |
| Packaged Weight | 30.16 kg |

## Product Details

| | |
|---|---|
| Country of Origin | United Kingdom |
| Product Material | Mfc Textured Woodgrain |
| Colour/Finish | Charcoal Black Woodgrain |
| Mount Type | Floor |
| Style | Contemporary |
| Handle Type | Finger Pull |
| Construction Method | Cam & Wood Dowel |
| Construction Type | Rigid |
| Fascia Finish | Mfc Smooth Woodgrain |
| Fsc Certified | Yes |
| Handles Included | Yes |
| Inner Bowl Height | 103 mm |
| Leg Set Included | No |
| Material Thickness | 18 mm |
| No. Doors | 2 |
| No. Of Tapholes | 1 |
| No. Shelves | 1 |
| Number Of Bowls | 1 |
| Number Of Shelves | 1 |
| Overflow Included | Yes |
| Tap Included | No |
| Waste Included | No |
| Waste Shroud | No |

© ROXOR Group

**Sales Code:** OFF608

**Barcode:** 5055275817452

**Brand:** Hudson Reed

**Description:** Hudson Reed Fusion Charcoal Black Woodgrain 600mm 2 Door Floor Standing Vanity Unit



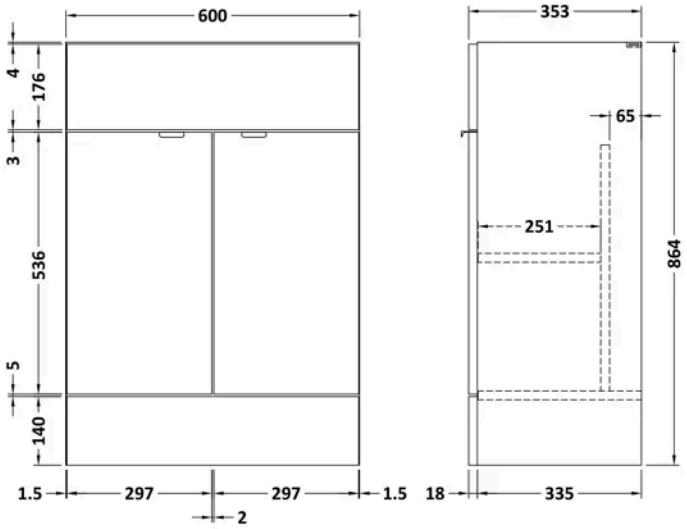


## Product Dimensions

| | |
|---|---|
| Product | 864 x 600 x 355mm (H x W x D) |
| Packaged | 375 x 620 x 900mm (H x W x D) |
| Nett Weight | 20.5 kg |
| Packaged Weight | 21 kg |

## Packaging Details

| | |
|---|---|
| Box Qty | 1 |

## Product Details

| | |
|---|---|
| Country of Origin | United Kingdom |
| Product Material | Mfc Textured Woodgrain |
| Colour/Finish | Charcoal Black Woodgrain |
| Mount Type | Floor |
| Style | Contemporary |
| Handle Type | Finger Pull |
| Construction Method | Cam & Wood Dowel |
| Construction Type | Rigid |
| Fascia Finish | Mfc Textured Woodgrain |
| Fsc Certified | Yes |
| Handles Included | Yes |
| Material Thickness | 18 mm |
| No. Doors | 2 |
| Waste Shroud | No |

© ROXOR Group

**Sales Code:** PMB313 **Barcode:** 5055369071982 **Brand:** Hudson Reed **Description:** 1 Tap Hole 600mm Polymarble Rectangular Basin



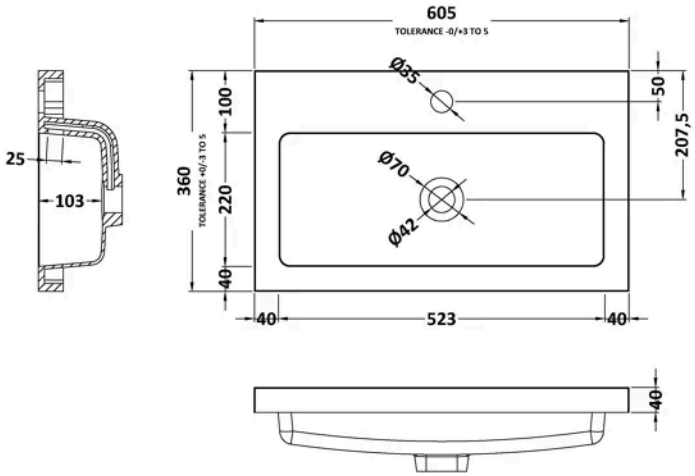


## Product Dimensions

| | |
|---|---|
| Product | 355 x 603 x 135mm (H x W x D) |
| Packaged | 410 x 200 x 650mm (H x W x D) |
| Nett Weight | 9.66 kg |
| Packaged Weight | 9.66 kg |

## Packaging Details

| | |
|---|---|
| Box Qty | 1 |

## Product Details

| | |
|---|---|
| Country of Origin | China |
| Product Material | Polymarble |
| Colour/Finish | White |
| Style | Contemporary |
| Ce Certified | Yes |
| Inner Bowl Height | 103 mm |
| No. Of Tapholes | 1 |
| Number Of Bowls | 1 |
| Overflow Included | Yes |
| Tap Included | No |
| Waste Included | No |

© ROXOR Group