Sales Code: CBI535

Barcode: 5056211816836

Brand: Hudson Reed

Description: Hudson Reed Fusion Anthracite Woodgrain 1200mm 4 Door Compact Wall Hung Vanity Unit With Basin



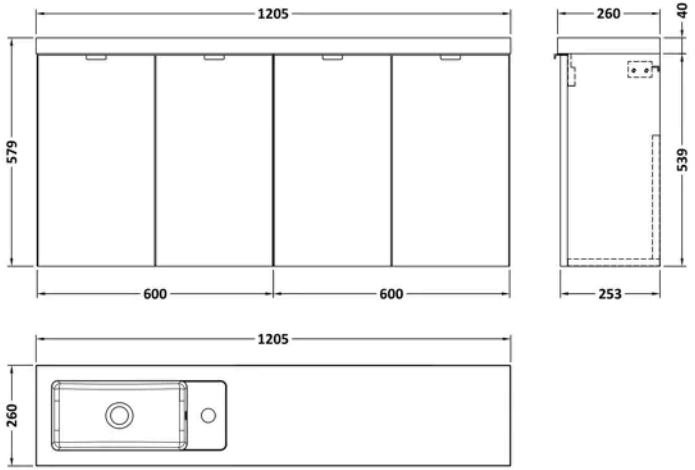

Product Dimensions

Product	579 x 1205 x 260mm (H x W x D)
Packaged	55 x 55 x 55mm (H x W x D)
Nett Weight	35.5 kg
Packaged Weight	36 kg

Product Details

Country of Origin	United Kingdom
Product Material	Mfc Textured Woodgrain
Colour/Finish	Anthracite Woodgrain
Mount Type	Wall Hung
Style	Contemporary
Handle Type	Finger Pull
Construction Method	Cam & Wood Dowel
Construction Type	Rigid
Fascia Finish	Mfc Smooth Woodgrain
Fsc Certified	Yes
Handles Included	Yes
Inner Bowl Height	103 mm
Leg Set Included	No
Material Thickness	18 mm
No. Doors	2
No. Of Tapholes	1
Number Of Bowls	1
Overflow Included	Yes
Tap Included	No
Waste Included	No
Waste Shroud	No

© ROXOR Group

Sales Code: OFF567

Barcode: 5056211812920

Brand: Hudson Reed

Description: Hudson Reed Fusion 600mm Anthracite Woodgrain 2 Door Compact Wall Hung Vanity Unit



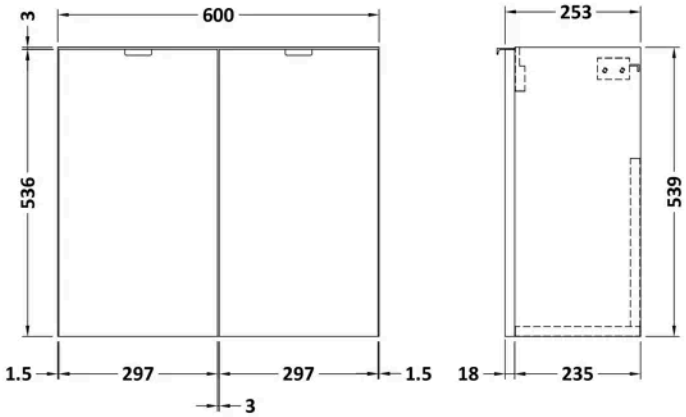

Product Dimensions

Product	540 x 600 x 353mm (H x W x D)
Packaged	375 x 620 x 560mm (H x W x D)
Nett Weight	11 kg
Packaged Weight	11.5 kg

Packaging Details

Box Qty	1

Product Details

Country of Origin	United Kingdom
Product Material	Mfc Textured Woodgrain
Colour/Finish	Anthracite Woodgrain
Mount Type	Wall Hung
Style	Contemporary
Construction Method	Cam & Wood Dowel
Construction Type	Rigid
Fascia Finish	Mfc Textured Woodgrain
Handles Included	Yes
Material Thickness	18 mm
No. Doors	2
No. Shelves	1
Number Of Shelves	1

© ROXOR Group

Sales Code: PMB404 **Barcode:** 5055275812440 **Brand:** Hudson Reed **Description:** Hudson Reed Fusion 1 Tap Hole 1200mm Compact Polymarble Basin



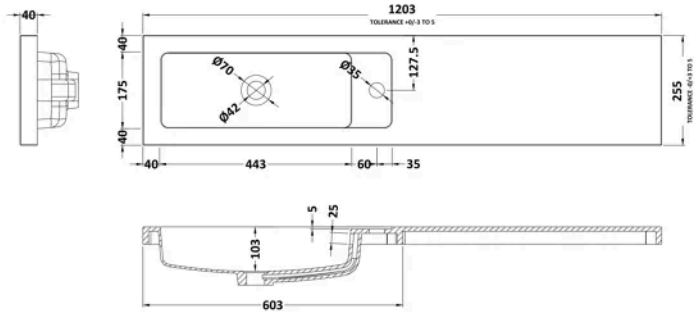

Product Dimensions

Product	135 x 1203 x 255mm (H x W x D)
Packaged	190 x 320 x 1260mm (H x W x D)
Nett Weight	14 kg
Packaged Weight	14 kg

Packaging Details

Box Qty	1

Product Details

Country of Origin	China
Product Material	Polymarble
Colour/Finish	White
Style	Contemporary
Ce Certified	Yes
No. Of Tapholes	1

© ROXOR Group