Sales Code: CBI531A

Barcode: 5056211889663

Brand: Hudson Reed

Description: Hudson Reed Fusion Anthracite Woodgrain 800mm 2 Drawer Wall Hung Vanity Unit With Basin



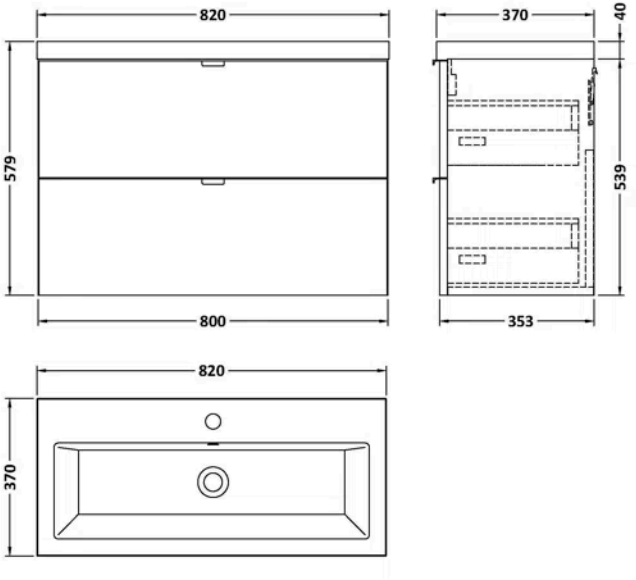

Product Dimensions

Product	579 x 805 x 360mm (H x W x D)
Packaged	550 x 550 x 550mm (H x W x D)
Nett Weight	37 kg
Packaged Weight	37.5 kg

Packaging Details

Box Qty	2

Product Details

Country of Origin	United Kingdom
Product Material	Mfc Textured Woodgrain
Colour/Finish	Anthracite Woodgrain
Mount Type	Wall Hung
Style	Contemporary
Handle Type	Finger Pull
Construction Method	Cam & Wood Dowel
Construction Type	Rigid
Drawer Type	80mm High Metal Soft-close
Fascia Finish	Mfc Smooth Woodgrain
Fsc Certified	Yes
Handles Included	Yes
Inner Bowl Height	103 mm
Leg Set Included	No
Material Thickness	18 mm
No. Drawers	2
No. Of Tapholes	1
Number Of Bowls	1
Overflow Included	Yes
Tap Included	No
Waste Included	No
Waste Shroud	Yes

© ROXOR Group

Sales Code: CBM315 **Barcode:** 5056211875796 **Brand:** Hudson Reed **Description:** 1 Tap Hole 820mm Ceramic Basin



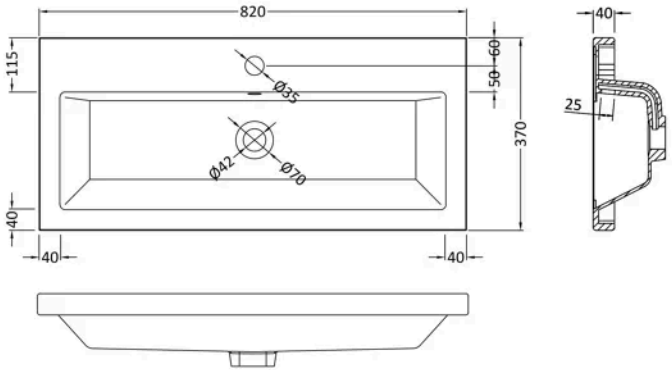

Product Dimensions

Product	150 x 820 x 370mm (H x W x D)
Packaged	200 x 420 x 855mm (H x W x D)
Nett Weight	12 kg
Packaged Weight	12 kg

Packaging Details

Box Qty	1

Product Details

Country of Origin	China
Product Material	Vitreous China
Colour/Finish	White
Style	Contemporary
Ce Certified	Yes

© ROXOR Group

Sales Code: OFF539 **Barcode:** 5056211812982 **Brand:** Hudson Reed **Description:** Hudson Reed Fusion 800mm Anthracite Woodgrain 2 Drawer Wall Hung Vanity Unit



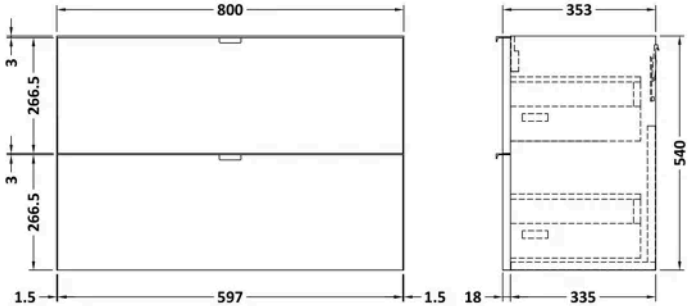

Product Dimensions

Product	540 x 800 x 353mm (H x W x D)
Packaged	375 x 820 x 560mm (H x W x D)
Nett Weight	25.5 kg
Packaged Weight	26 kg

Packaging Details

Box Qty	1

Product Details

Country of Origin	United Kingdom
Product Material	Mfc Textured Woodgrain
Colour/Finish	Anthracite Woodgrain
Mount Type	Wall Hung
Style	Contemporary
Construction Method	Cam & Wood Dowel
Construction Type	Rigid
Fascia Finish	Mfc Textured Woodgrain
Handles Included	Yes
Material Thickness	18 mm
No. Drawers	2

© ROXOR Group