Sales Code: CBI507A

Barcode: 5056211889489

Brand: Hudson Reed

Description: Hudson Reed Fusion Anthracite Woodgrain 600mm 2 Door Floor Standing Vanity Unit With Basin



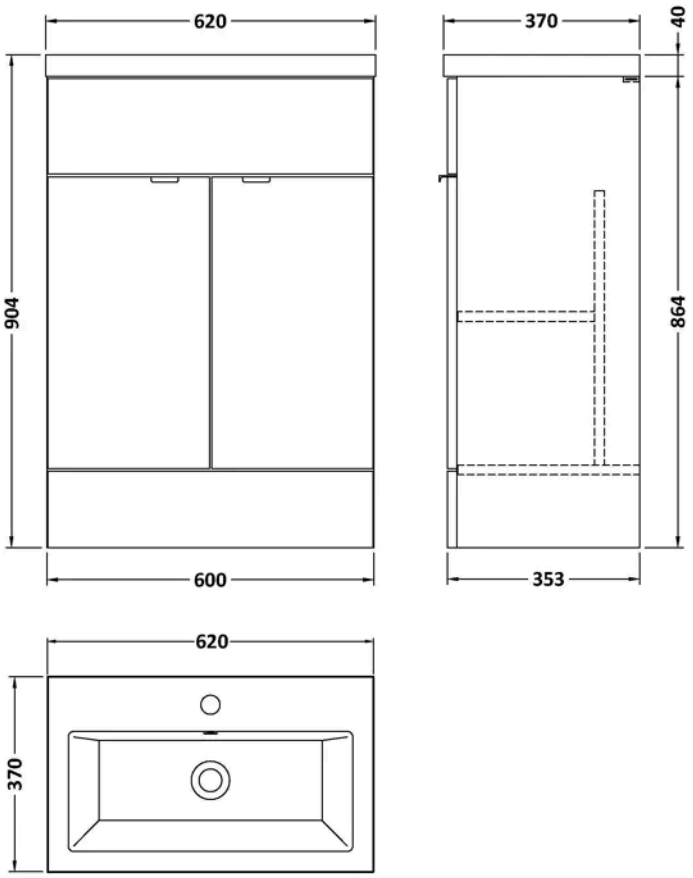

Product Dimensions

Product	904 x 605 x 360mm (H x W x D)
Packaged	550 x 550 x 550mm (H x W x D)
Nett Weight	29.66 kg
Packaged Weight	30.16 kg

Packaging Details

Box Qty	2

Product Details

Country of Origin	United Kingdom
Product Material	Mfc Textured Woodgrain
Colour/Finish	Anthracite Woodgrain
Mount Type	Floor
Style	Contemporary
Handle Type	Finger Pull
Construction Method	Cam & Wood Dowel
Construction Type	Rigid
Fascia Finish	Mfc Smooth Woodgrain
Fsc Certified	Yes
Handles Included	Yes
Inner Bowl Height	103 mm
Leg Set Included	No
Material Thickness	18 mm
No. Doors	2
No. Of Tapholes	1
No. Shelves	1
Number Of Bowls	1
Number Of Shelves	1
Overflow Included	Yes
Tap Included	No
Waste Included	No
Waste Shroud	No

© ROXOR Group

Sales Code: CBM313 **Barcode:** 5056211875833 **Brand:** nuie **Description:** nuie Arno Compact 1 Tap Hole 620mm Ceramic Basin



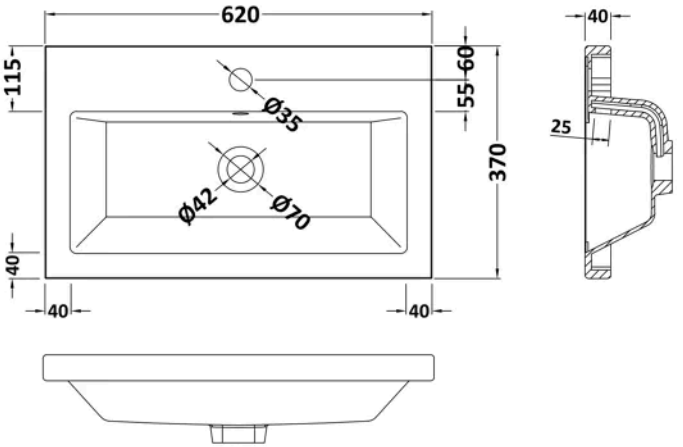

Product Dimensions

Product	150 x 620 x 370mm (H x W x D)
Packaged	410 x 200 x 650mm (H x W x D)
Nett Weight	9.66 kg
Packaged Weight	9.66 kg

Packaging Details

Box Qty	1

Product Details

Country of Origin	China
Product Material	Vitreous China
Colour/Finish	White
Style	Contemporary
Ce Certified	Yes
Inner Bowl Height	103 mm
No. Of Tapholes	1
Number Of Bowls	1
Overflow Included	Yes
Tap Included	No
Waste Included	No

© ROXOR Group

Sales Code: OFF508 **Barcode:** 5055275820209 **Brand:** Hudson Reed **Description:** Hudson Reed Fusion Anthracite Woodgrain 600mm 2 Door Floor Standing Vanity Unit



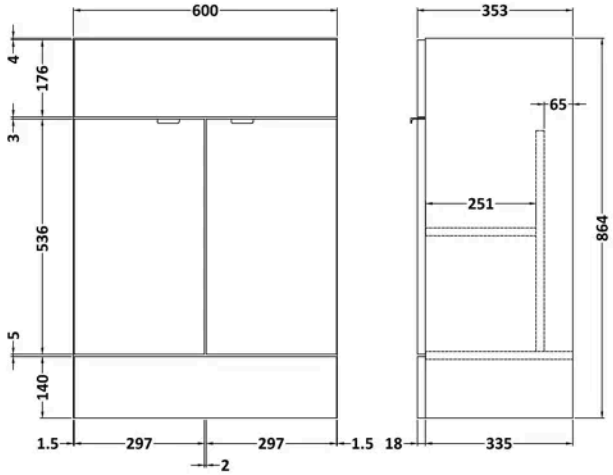

Product Dimensions

Product	864 x 600 x 355mm (H x W x D)
Packaged	375 x 620 x 900mm (H x W x D)
Nett Weight	20.5 kg
Packaged Weight	21 kg

Packaging Details

Box Qty	1

Product Details

Country of Origin	United Kingdom
Product Material	Mfc Textured Woodgrain
Colour/Finish	Anthracite Woodgrain
Mount Type	Floor
Style	Contemporary
Handle Type	Finger Pull
Construction Method	Cam & Wood Dowel
Construction Type	Rigid
Fascia Finish	Mfc Textured Woodgrain
Fsc Certified	Yes
Handles Included	Yes
Material Thickness	18 mm
No. Doors	2
Waste Shroud	No

© ROXOR Group